engineeringlink
building envelope & structure

375 University Ave., Suite 901
Toronto, ON M5G 2J5
b: 416-599-LINK (5465)
www.engineeringlink.ca

STRUCTURAL ADDENDUM-No: SA-01

23-1345

To: LGA Architectural Partners

Date June 19, 2026

Re: 321 John Street, Cobourg, ON
Clarifications & Updates to Structural Documents

The following items are changes to project Contract Structural Documents. General Contractors shall include the items described in their tender bid including all labour, material, equipment and services required to complete the work described.

Description of Drawings Revised & Revisions

1.0 S201 Foundation Plan

1.1 Clarity added to between sleeving through foundation wall and under footing. Additional sleeves under footings added.
1.2 Two slab depressions removed. One slab depression added in mechanical room.

2.0 S201-B Foundation Part Plan

2.1 Added new sheet: Foundation part plan with landscaping elements, including planters, stairs, ramp, slab on grades, and handrail anchorage detail. New stairs and ramp are supported on concrete foundation walls.

3.0 S202 Main Floor Showing Second Floor Framing Plan

3.1 Stair landings reconfigured, beam added to one landing on each stairwell to support stringers above.
3.2 Mechanical chase sizes increased based on architectural request. LVL reinforcement added around opening.
3.3 Reinforcement for water heaters adjusted.
3.4 Extent of exterior walls adjusted in four locations.
3.5 Clarity added for suspended mechanical units below wood I-joists.
3.6 Four lintel sizes adjusted.

4.0 S203 Second Floor Showing Third Floor Framing Plan

4.1 Stair landings reconfigured, beam added to one landing on each stairwell to support stringers above.
4.2 Mechanical chase sizes increased based on architectural request. LVL reinforcement added around opening.
4.3 Reinforcement for water heaters adjusted.
4.4 Three lintel sizes adjusted.

5.0 S204 Third Floor Showing Roof Framing Plan

5.1 Two lintel sizes adjusted.

6.0 <u>S205 Truss Bracing Plan</u>

6.1 Notes added to direct reader to arch drawings for attic walkway details and other roof details.

7.0 <u>S401 Sections and Details</u>

7.1 One section noted as no longer in use.
7.2 Visual adjustments made to sections.

8.0 <u>S411 Sections and Details</u>

8.1 Sections adjusted to show double bottom plate.

9.0 <u>S412 Sections and Details</u>

9.1 Sections adjusted to show double bottom plate.

10.0 <u>S413 Sections and Details</u>

10.1 Section adjusted to show double bottom plate.

11.0 <u>S414 Sections and Details</u>

11.1 Nailing added to shear wall extension on 2/S414.
11.2 Lintel pushed up to truss space to avoid interference with curtain wall in 4/S414. Brace detailing removed.

12.0 <u>S501 Shear Wall Elevations</u>

12.1 Visual adjustment made to openings by request from architect.

13.0 <u>S502 Shear Wall Elevations</u>

13.1 Opening in first floor wall removed in A/S502. Extent of shear wall increased.

14.0 <u>S503 Shear Wall Elevations</u>

14.1 Visual adjustment made to openings by request from architect.

15.0 <u>S504 Shear Wall Elevations</u>

15.1 Visual adjustment made to openings by request from architect.

Engineering Link Incorporated

Per: Fred Ouellette, P.Eng.
Senior Associate
c: 647-654-0231
e: Fred.O@englink.ca

Attached: Updated Structural Drawings

To: Antero Fonte antero@lga-ap.com

File: h:\2023\1300 - 1399\23-1345\07 contract_admin\addendum\23-1345 - structural tender addendum - sa-01.docx

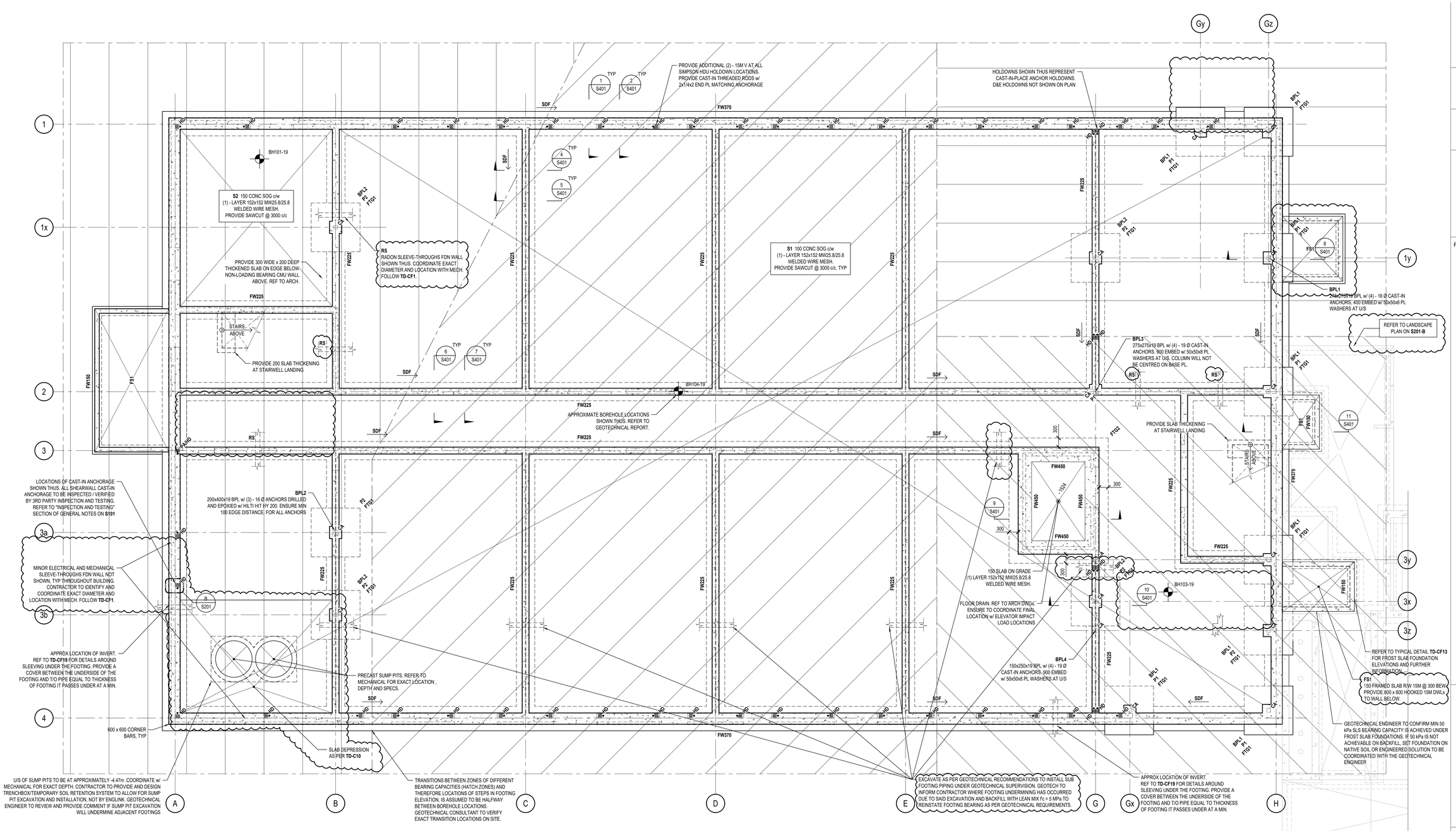

FOUNDATION MEMBER SCHEDULE

MARK	TYPE	REMARKS
FW150	150 WIDE CAST-IN-PLACE (CIP) CONC FDN WALL	15M @ 400 H&V MIDDLE OF WALL ON 400 x 250 STRIP FTG R/W (2) - 15M CONT
FW225	225 WIDE CIP CONC FDN WALL	15M @ 400 H&V EF. PROVIDE ADDITIONAL (2) - 15M VERT AT ALL CAST-IN ANCHORAGE LOCATIONS. ON 800x250 STRIP FTG R/W (3) - 15M CONT
FW370	370 WIDE CIP CONC FDN WALL	15M @ 400 H&V EF. PROVIDE ADDITIONAL (2) - 15M VERT AT ALL CAST-IN ANCHORAGE LOCATIONS. ON 800x250 STRIP FTG R/W (4) - 15M CONT
FW450	450 WIDE CIP CONC FDN WALL	15M @ 300 H&V EF
P1	350 x 400 CONC PIER	R/W (8) - 15M V + 10M TIES @ 200 PROVIDE HOOKED DWLs MATCHING VERTs INTO FTG BELOW
P2	400 x 400 CONC PIER	R/W (8) - 15M V + 10M TIES @ 200 PROVIDE HOOKED DWLs MATCHING VERTs INTO FTG BELOW
FTG1	1600 x 1600 x 400 CONC PAD FTG	R/W (6) - 15M BEW
FTG2	400 THICK CONC PAD FTG	R/W 15M @ 300 T&B EW. HOOK 90° AT EA END SEE PLANS FOR EXTENT

HATCH LEGEND - GEOTECHNICAL INFORMATION

HATCH	SLS BEARING CAPACITY (SEE NOTE 1)	ELEVATION REQ'D FOR LISTED SLS CAPACITY (SEE NOTE 1)	SPECIFIED U/S FTG ELEVATION IN HATCHED AREA U/N (SEE NOTE 2)
	200 kPa	80.835 masl	- 1.77 m
	150 kPa	80.265 masl	- 2.34 m
	150 kPa	81.035 masl	- 2.34 m
	200 kPa	79.845 masl	- 2.76 m

NOTES

1. REFER TO GEOTECHNICAL REPORT TO VERIFY INFORMATION LISTED. GEOTECHNICAL CONSULTANT TO VERIFY ALL BEARING CAPACITIES AND FOUNDATION ELEVATIONS ON SITE PRIOR TO CONSTRUCTION.
2. U/S FTG ELEVATIONS ARE TO BE READ READ FROM FINISHED GROUND FLOOR ELEVATION.
3. TRANSITIONS BETWEEN ZONES OF DIFFERENT BEARING CAPACITIES (HATCH ZONES) AND THEREFORE LOCATIONS OF STEPS IN FOOTING ELEVATION, IS ASSUMED TO BE HALFWAY BETWEEN BOREHOLE LOCATIONS. GEOTECHNICAL CONSULTANT TO VERIFY EXACT TRANSITION LOCATIONS ON SITE.
4. WHERE THE SUBGRADE BEARING CAPACITY AT THE UNDERSIDE OF FOOTINGS INDICATED ON THESE DRAWINGS IS FOUND TO BE LESS THAN THE REQUIRED SPECIFIED CAPACITY INDICATED ON EITHER THE GEOTECHNICAL REPORT OR THE STRUCTURAL DRAWINGS, EXCAVATE DEEPER TO ACHIEVE THE REQUIRED BEARING CAPACITY AND BACKFILL WITH LEAN CONCRETE (MINIMUM f'c = 10 MPa) UNDER SUPERVISION OF THE GEOTECHNICAL ENGINEER.

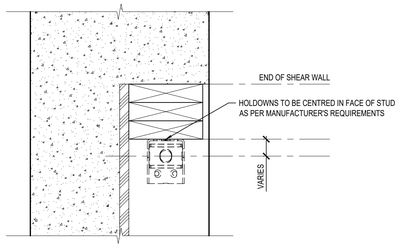

B S201
1 : 5

A S201 FOUNDATION PLAN
1 : 50

FOUNDATION NOTES

1. TOP OF SLAB ON GRADE TO BE 0.016m BELOW FINISHED GROUND FLOOR ELEVATION 82.60 m, EXCEPT AS CROSSED AND NOTED. AREAS CROSSED AND NOTED TO BE READ FROM FINISHED GROUND FLOOR ELEVATION.
2. A GEOTECHNICAL REPORT "GEOTECHNICAL INVESTIGATION REPORT 25 JAMES STREET EAST, COBOURG, ONTARIO" HAS BEEN COMPLETED BY CAMBIUM. FILE NUMBER 8555-001, DATED 2019-06-14. READ THIS REPORT AND THOROUGHLY FAMILIARIZE YOURSELF WITH ALL SURFACE AND SUBSURFACE CONDITIONS.
3. A SOIL BEARING CAPACITY OF 150 kPa (SLS) AND 225 kPa (ULS) HAS BEEN USED IN DESIGN. THIS IS TO BE VERIFIED BY A GEOTECHNICAL CONSULTANT PRIOR TO PLACEMENT OF FOOTINGS.
4. ELEVATION OF SOILS CAPABLE OF SUSTAINING THE SOIL BEARING CAPACITY NOTED ABOVE VARIES AND MAY BE LOCATED LOWER THAN MINIMUM REQUIRED FOR FROST COVER. CONTRACTOR TO PROVIDE ALTERNATIVES FOR BOTH STEPS FOOTINGS OR THE REMOVAL AND COMPACTION OF SOIL TO OBTAIN THE REQUIRED BEARING CAPACITY.
5. SEE ARCHITECTURAL DRAWINGS FOR SLOPE TO DRAIN. MAINTAIN SLAB THICKNESS SHOWN.
6. REFER TO GENERAL NOTES AND TYPICAL DETAILS FOR ADDITIONAL INFORMATION.
7. WHERE THE SUBGRADE BEARING CAPACITY AT THE UNDERSIDE OF FOOTINGS INDICATED ON THESE DRAWINGS IS FOUND TO BE LESS THAN THE REQUIRED SPECIFIED CAPACITY INDICATED ON EITHER THE GEOTECHNICAL REPORT OR THE STRUCTURAL DRAWINGS, BACKFILL WITH LEAN CONCRETE (MINIMUM f'c = 10 MPa) UNDER SUPERVISION OF THE GEOTECHNICAL ENGINEER TO ACHIEVE THE CAPACITIES SPECIFIED FOR THE PROJECT.

LGA architectural partners
310 Spadina Ave, Suite 100B
Toronto, Ontario, Canada M5T 2E8
T: 416 203 7600 F: 416 203 3342
lga-ap.com

NOTE: This drawing is the property of the architect and may not be reproduced or used without the expressed consent of the architect. The contractor shall be responsible for checking and verifying all levels and dimensions and shall report all discrepancies to the architect and obtain clarification prior to commencing work. Not for construction unless stamped by the architect and issued for such purpose.
DO NOT SCALE DRAWINGS

engineeringlink
building envelope & structure
375 University Ave., Suite 901
Toronto, ON M5G 2J5
416-599-(LINK) 5465
www.engineeringlink.ca
Project No. 23-1345

Professional Seal

NOT FOR CONSTRUCTION

N

ISSUE DATE:

NO.	DATE	DESCRIPTION
11	JUN 19, 2026	ISSUED FOR STRUCTURAL ADDENDUM SA-01
10	MAY 29, 2026	ISSUED FOR TENDER
9	MAY 29, 2026	ISSUED FOR PERMIT
8	MAR 20, 2026	ISSUED FOR COORDINATION
7	FEB 17, 2026	ISSUED FOR COORDINATION
6	JUL 14, 2023	ISSUED FOR TENDER
5	MAY 09, 2023	ISSUED FOR TENDER COORDINATION
4	APR 12, 2023	ISSUED FOR PERMIT
3	APR 06, 2023	ISSUED FOR PERMIT COORDINATION
2	MAR 31, 2023	ISSUED FOR PERMIT COORDINATION
1	FEB 10, 2023	ISSUED FOR CLASS B COSTING

PROJECT:
ONTARIO ABORIGINAL HOUSING SERVICES (OAHS)

321 JOHN STREET, COBOURG, ONTARIO

SHEET TITLE:
FOUNDATION PLAN

PROJECT NO: 19851
SCALE: 1 : 50
DRAWN BY: AQV
REVIEWED BY: ADV

SHEET NO:
S201

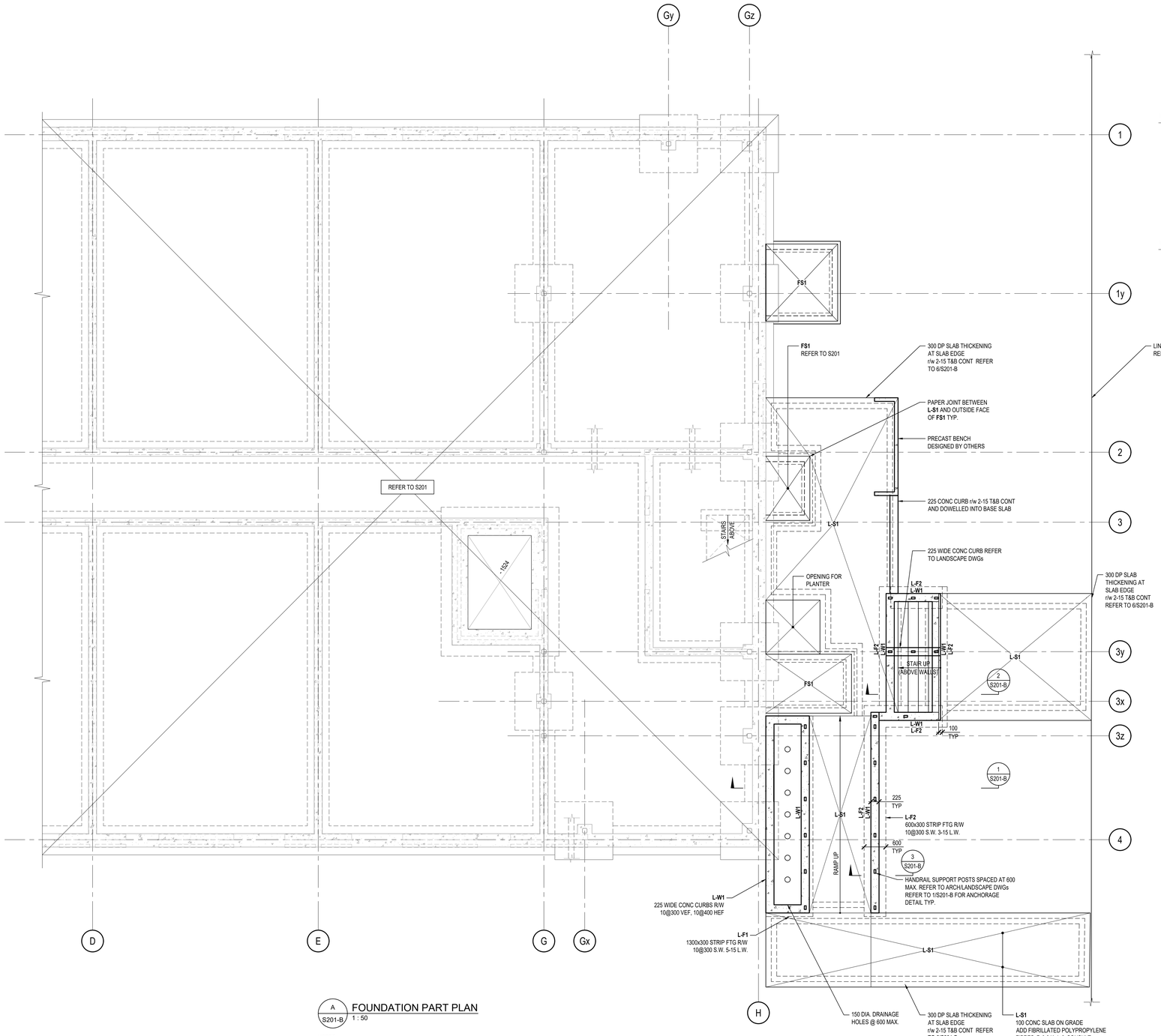

A S201-B FOUNDATION PART PLAN
1 : 50

NOTES:

1. ALL EXPOSED STEEL TO BE HOT DIP GALVANIZED. TOUCH UP ANY DAMAGED GALVANIZED STEEL WITH A ZINC RICH PRIMER.
2. ALL LANDSCAPING CONCRETE SHALL BE 35 MPa. "C-1" EXPOSURE TYPE WITH DCI CORROSION INHIBITOR AND AIR ENTRAINMENT.
3. REFER TO GENERAL NOTES AND TYPICAL DETAILS FOR REINFORCING CURTAILMENT LENGTHS, SPLICE LENGTHS, ETC. WHERE NOT NOTED.
4. FOUND ALL EXTERIOR CONCRETE PAVING NOTED ON COMPACTED SUBGRADE AS INDICATED ON THE GEOTECHNICAL REPORT. SUBGRADE TO BE INSPECTED BY A GEOTECHNICAL ENGINEER.
5. FOUND ALL FOOTINGS NOTED ON THIS DRAWING ON SOIL CAPABLE OF SUSTAINING A MINIMUM GEOTECHNICAL REACTION OF 75 kPa SLS.

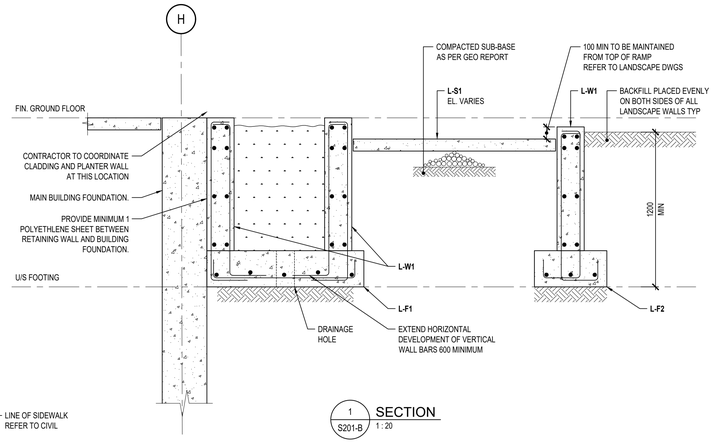

1 S201-B SECTION
1 : 20

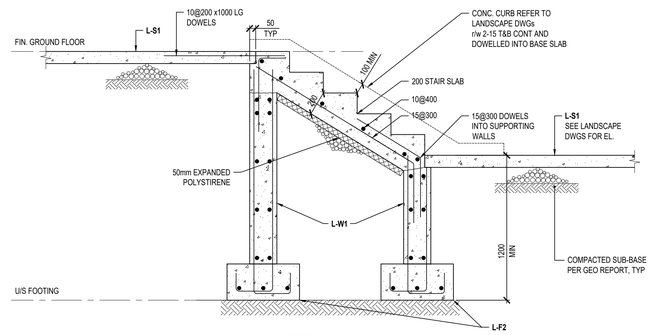

2 S201-B SECTION
1 : 20

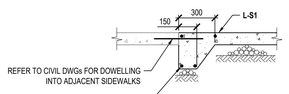

6 S201-B SECTION
1 : 20

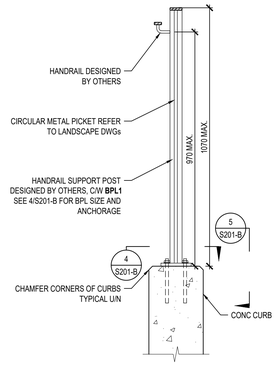

3 S201-B
1 : 10

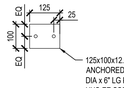

4 S201-B BPL1
1 : 10

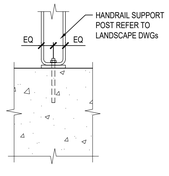

5 S201-B
1 : 10

LGA architectural partners
310 Spadina Ave, Suite 100B
Toronto, Ontario, Canada M5T 2E8
T: 416 203 7600 F: 416 203 3342
lga-ap.com

NOTE: This drawing is the property of the architect and may not be reproduced or used without the expressed consent of the architect. The contractor shall be responsible for checking and verifying all levels and dimensions and shall report all discrepancies to the architect and obtain clarification prior to commencing work. Not for construction unless stamped by the architect and issued for such purpose.

DO NOT SCALE DRAWINGS

engineeringlink
building envelope & structure
375 University Ave., Suite 901
Toronto, ON M5G 2J5
416-599-(LINK) 5465
www.engineeringlink.ca
Project No. 23-1345

Professional Seal

NOT FOR CONSTRUCTION

N

ISSUE DATE:

NO.	DATE	DESCRIPTION
11	JUN 19, 2026	ISSUED FOR STRUCTURAL ADDENDUM SA-01
1	JUN 11, 2026	ISSUED FOR TENDER ADDENDUM

PROJECT:

ONTARIO ABORIGINAL HOUSING SERVICES (OAHS)

321 JOHN STREET, COBOURG, ONTARIO

SHEET TITLE:

FOUNDATION PART PLAN

PROJECT NO: 19851
SCALE: 1 : 50
DRAWN BY: AQV
REVIEWED BY: ADV

SHEET NO:

S201-B

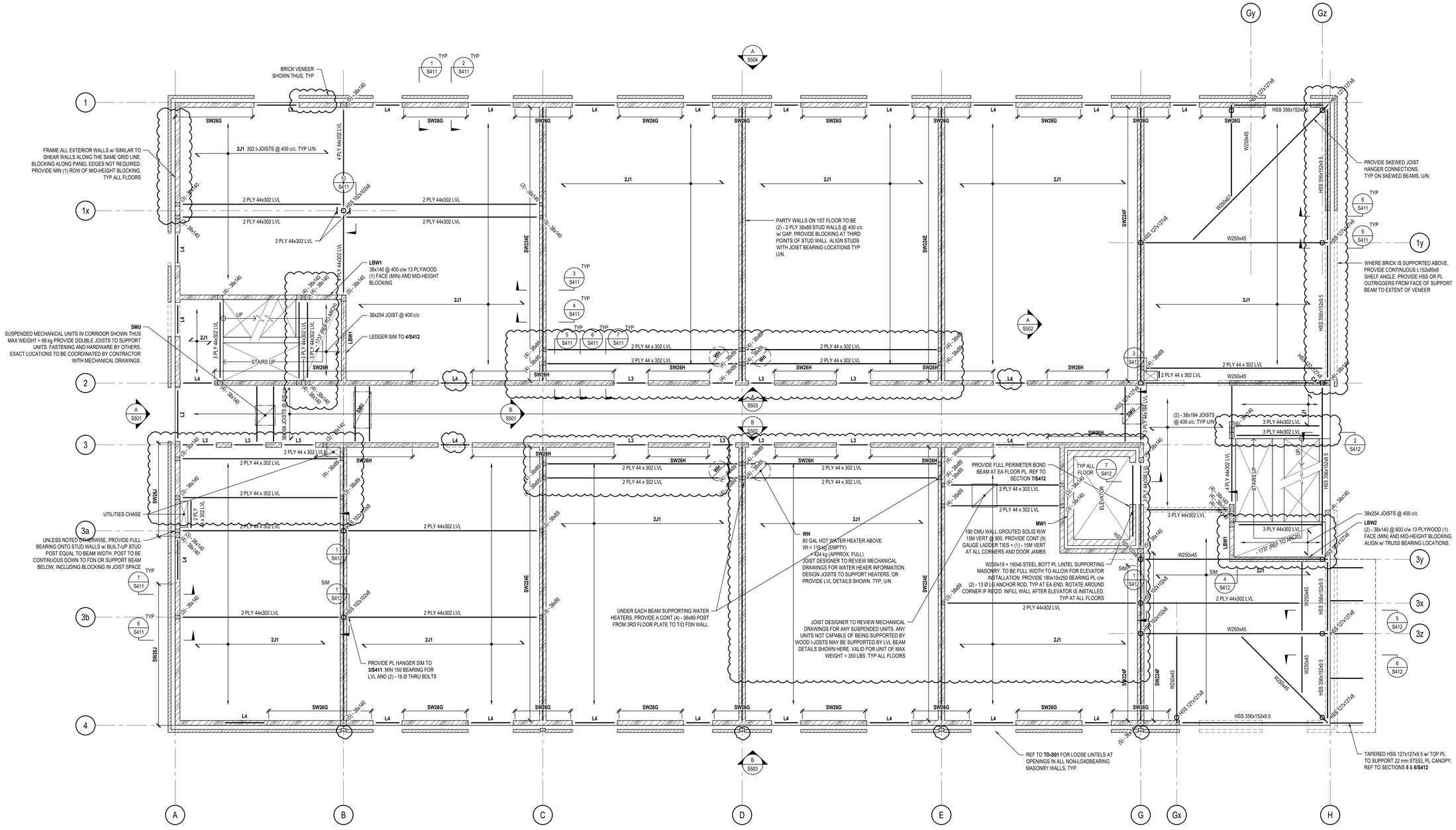

LINTEL SCHEDULE

MARK	MEMBER SIZE	JACK & KING POST	REMARKS
L1	(2) - 38 x 184	1 JACK + 1 KING	
L2	(3) - 38 x 184	1 JACK + 1 KING	
L3	(3) - 38 x 184	2 JACKS + 1 KING	
L4	(3) - 44 x 241 LVL	2 JACKS + 2 KINGS	
L5	(3) - 44 x 302 LVL	2 JACKS + 2 KINGS	(1) LAYER OF 6 PLYWOOD BETWEEN 2ND & 3RD PLIES

A S202 MAIN FLOOR SHOWING SECOND FLOOR FRAMING PLAN

1 : 50

SECOND FLOOR FRAMING NOTES

1. TOP OF STEEL BEAMS ARE 0.1446 m BELOW T/O FINISHED FLOOR ELEVATION 3.3 m UNLESS OTHERWISE NOTED. ELEVATIONS NOTED ON STEEL BEAMS ARE REFERENCED TO T/O FINISHED FLOOR ELEVATION.
2. TOP OF LVL BEAMS ARE 0.070 m BELOW T/O FINISHED FLOOR ELEVATION UNLESS OTHERWISE NOTED. ELEVATIONS NOTED ON BEAMS ARE REFERENCED TO T/O FINISHED FLOOR ELEVATION. REFER TO ARCHITECTURAL DRAWINGS FOR LINTEL ELEVATIONS.
3. LOADS USED IN DESIGN:

DEAD	3.11 kPa
INCLUDES 1.0 kPa PARTITION ALLOWANCE & 1.0 kPa FOR 38 GYPCRETE TOPPING	
LIVE	
WITHIN UNITS	1.9 kPa
CORRIDORS AND STAIRWELLS	4.8 kPa
SNOW	N/A

4. ALL FLOOR SHEATHING TO BE 19mm T&G PLYWOOD GLUED AND SCREWED DIRECTLY TO JOISTS.
5. PROVIDE FULL BEARING FOR ALL BEAMS SUPPORTED AT STUD WALL LOCATIONS. ALL POSTS ARE TO BE CONTINUOUS TO FOUNDATION BELOW, INCLUDING SOLID BLOCKING IN JOIST SPACE

LGA architectural partners
310 Spadina Ave, Suite 100B
Toronto, Ontario, Canada M5T 2E8
T: 416 203 7600 F: 416 203 3342
lga-ap.com

NOTE: This drawing is the property of the architect and may not be reproduced or used without the expressed consent of the architect. The contractor shall be responsible for checking and verifying all levels and dimensions and shall report all discrepancies to the architect and obtain clarification prior to commencing work. Not for construction unless stamped by the architect and issued for such purpose.
DO NOT SCALE DRAWINGS

engineeringlink
building envelope & structure
375 University Ave., Suite 901
Toronto, ON M5G 2J5
416-599-(LINK) 5465
www.engineeringlink.ca
Project No. 23-1345

Professional Seal

NOT FOR CONSTRUCTION

ISSUE DATE:

NO.	DATE	DESCRIPTION
11	JUN 19, 2026	ISSUED FOR STRUCTURAL ADDENDUM SA-01
10	MAY 29, 2026	ISSUED FOR TENDER
9	MAY 29, 2026	ISSUED FOR PERMIT
7	FEB 17, 2025	ISSUED FOR COORDINATION
6	JUL 14, 2023	ISSUED FOR TENDER
5	MAY 09, 2023	ISSUED FOR TENDER COORDINATION
4	APR 12, 2023	ISSUED FOR PERMIT
3	APR 06, 2023	ISSUED FOR PERMIT COORDINATION
2	MAR 31, 2023	ISSUED FOR PERMIT COORDINATION
1	FEB 10, 2023	ISSUED FOR CLASS B COSTING

PROJECT:

ONTARIO ABORIGINAL HOUSING SERVICES (OAHS)

321 JOHN STREET, COBOURG, ONTARIO

SHEET TITLE:

SECOND FLOOR FRAMING PLAN

PROJECT NO: 19851
SCALE: 1 : 50
DRAWN BY: AQV
REVIEWED BY: ADV

SHEET NO:

S202

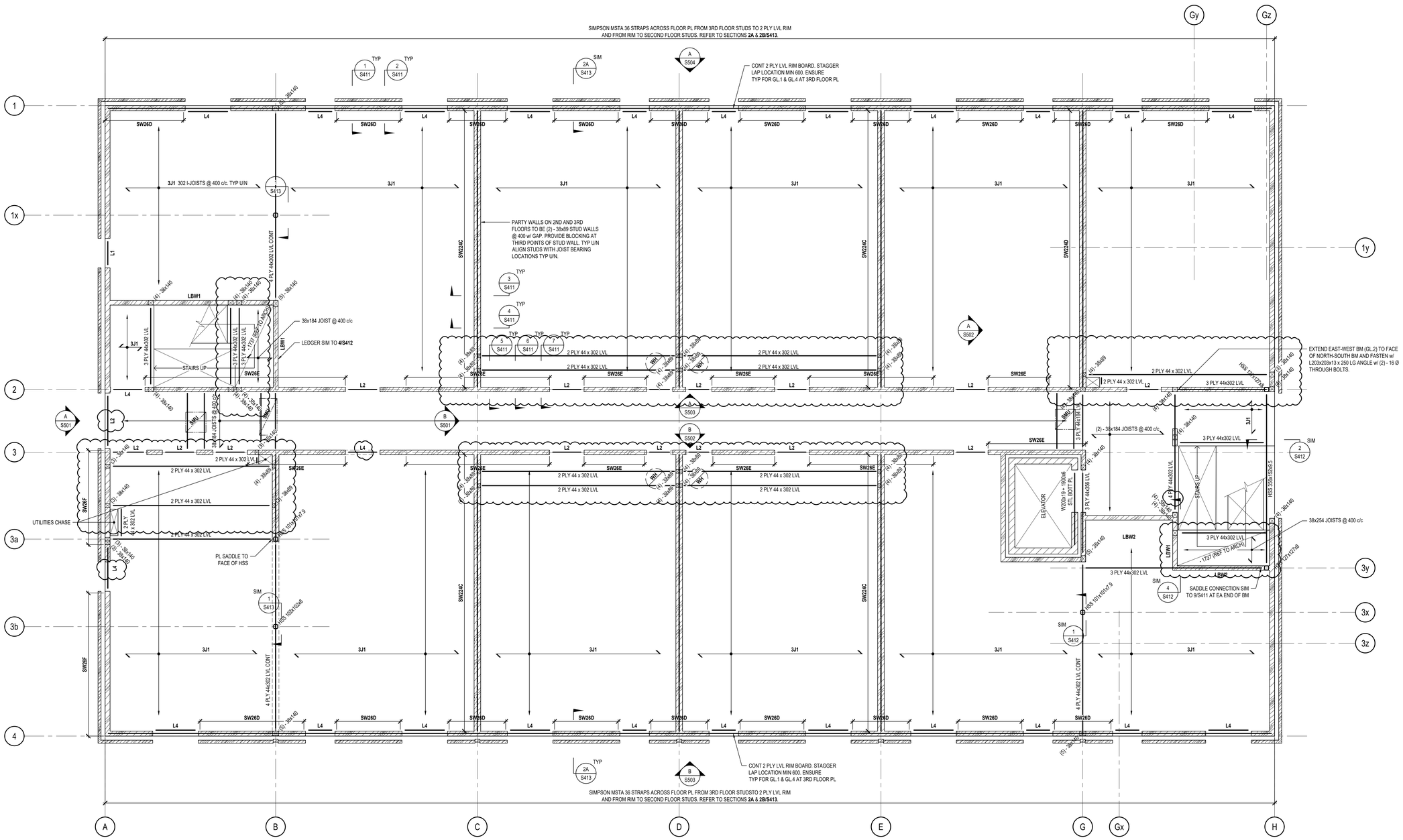

SECOND FLOOR SHOWING THIRD FLOOR FRAMING PLAN

A / S203 — 1 : 50

THIRD FLOOR FRAMING NOTES

1. TOP OF LVL BEAMS ARE 0.070 m BELOW T/O FINISHED FLOOR ELEVATION 6.6 m UNLESS OTHERWISE NOTED. ELEVATIONS NOTED ON BEAMS ARE REFERENCED TO T/O FINISHED FLOOR ELEVATION. REFER TO ARCHITECTURAL DRAWINGS FOR LINTEL ELEVATIONS.
2. LOADS USED IN DESIGN:

DEAD	3.11 kPa
INCLUDES 1.0 kPa PARTITION ALLOWANCE & 1.0 kPa FOR 38 mm GYPCRETE TOPPING	
LIVE	
WITHIN UNITS	1.9 kPa
CORRIDORS AND STAIRWELLS	4.8 kPa
SNOW	N/A

3. ALL ROOF SHEATHING TO BE 19mm T&G PLYWOOD GLUED AND SCREWED DIRECTLY TO TRUSSES
4. PROVIDE FULL BEARING FOR ALL BEAMS SUPPORTED AT STUD WALL LOCATIONS. ALL POSTS ARE TO BE CONTINUOUS TO FOUNDATION BELOW, INCLUDING SOLID BLOCKING IN JOIST SPACE
5. REFER TO **S202** FOR WOOD LINTEL SIZES.

LGA architectural partners
310 Spadina Ave, Suite 100B
Toronto, Ontario, Canada M5T 2E8
T: 416 203 7600 F: 416 203 3342
lga-ap.com

NOTE: This drawing is the property of the architect and may not be reproduced or used without the expressed consent of the architect. The contractor shall be responsible for checking and verifying all levels and dimensions and shall report all discrepancies to the architect and obtain clarification prior to commencing work. Not for construction unless stamped by the architect and issued for such purpose.

DO NOT SCALE DRAWINGS

engineeringlink
building envelope & structure
375 University Ave., Suite 901
Toronto, ON M5G 2J5
416-599-(LINK) 5465
www.engineeringlink.ca
Project No. 23-1345

Professional Seal

NOT FOR CONSTRUCTION

ISSUE DATE:

NO.	DATE	DESCRIPTION
11	JUN 19, 2026	ISSUED FOR STRUCTURAL ADDENDUM SA-01
10	MAY 29, 2026	ISSUED FOR TENDER
9	MAY 29, 2026	ISSUED FOR PERMIT
7	FEB 17, 2025	ISSUED FOR COORDINATION
6	JUL 14, 2023	ISSUED FOR TENDER
5	MAY 09, 2023	ISSUED FOR TENDER COORDINATION
4	APR 12, 2023	ISSUED FOR PERMIT
3	APR 06, 2023	ISSUED FOR PERMIT COORDINATION
2	MAR 31, 2023	ISSUED FOR PERMIT COORDINATION
1	FEB 10, 2023	ISSUED FOR CLASS B COSTING

PROJECT:

ONTARIO ABORIGINAL HOUSING SERVICES (OAHS)

321 JOHN STREET, COBOURG, ONTARIO

SHEET TITLE:

THIRD FLOOR FRAMING PLAN

PROJECT NO: 19851
SCALE: 1 : 50
DRAWN BY: AQV
REVIEWED BY: ADV

SHEET NO:

S203

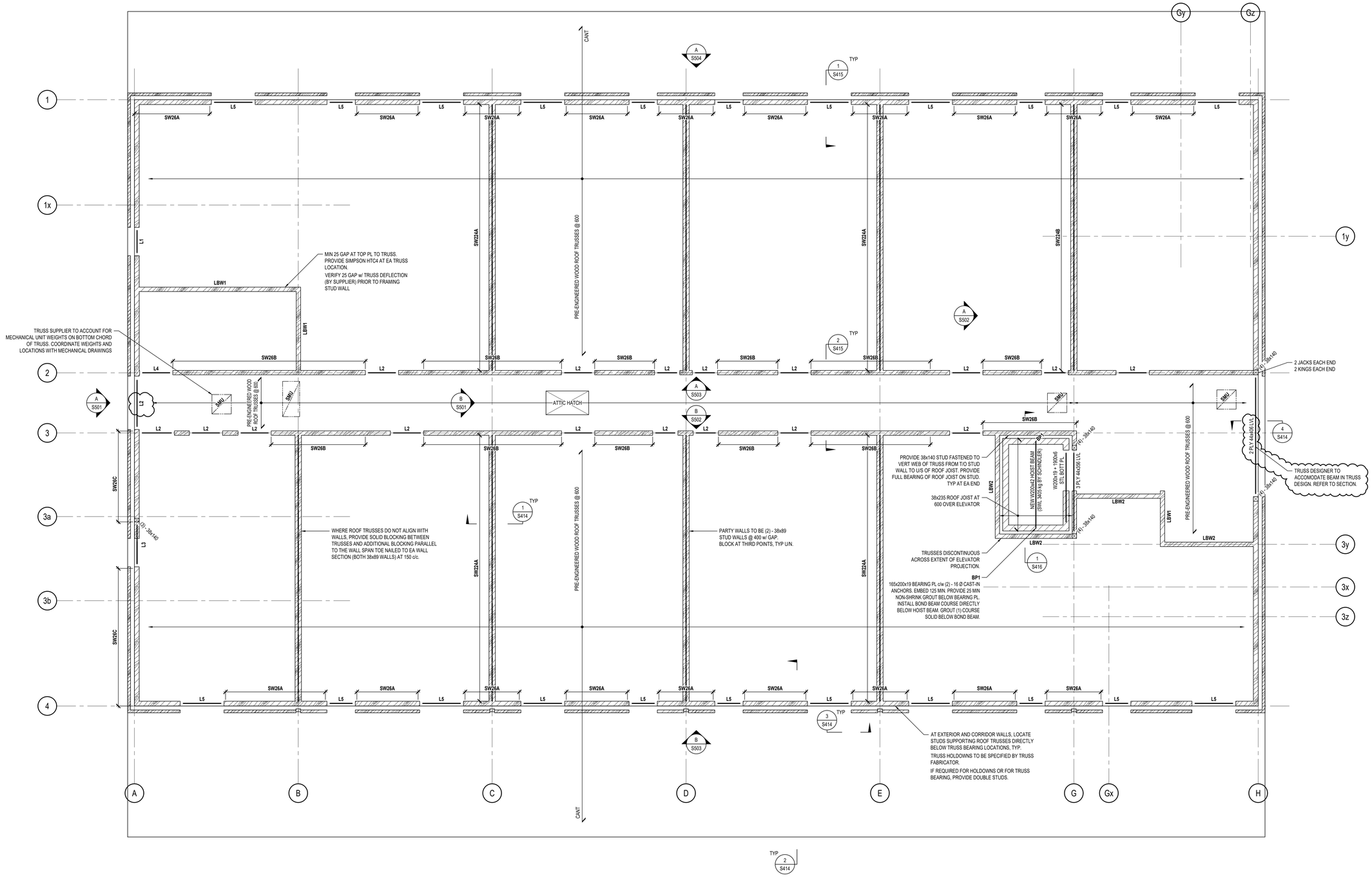

THIRD FLOOR SHOWING ROOF FRAMING PLAN

A S204 — 1 : 50

ROOF FRAMING NOTES

1. TOP OF LVL BEAMS ARE 0.0 m BELOW U/S ROOF STRUCTURE ELEVATION 9.516 m UNLESS OTHERWISE NOTED. ELEVATIONS NOTED ON BEAMS ARE REFERENCED TO U/S ROOF STRUCTURE ELEVATIONS. REFER TO ARCHITECTURAL DRAWINGS FOR LINTEL ELEVATIONS.

2. LOADS USED IN DESIGN:

DEAD	1.72 kPa *INCLUDES 0.5 kPa SOLAR ALLOWANCE*
LIVE	N/A
SNOW	1.36 kPa +1.36 kPa ASL

ASL LOAD IS TO BE BASED ON FINAL SOLAR PANEL ARRANGEMENT. CURRENT ASL LOAD SHOWN IS ASSUMED. UPON RECEIPT OF SOLAR PANEL ARRANGEMENT SHOWING FINAL OFFSET FROM ROOF SURFACE, SPACING BETWEEN PANELS, TILT OF PANELS, SNOW FENCES, ETC. STRUCTURAL DESIGN IS TO BE VERIFIED AND IS SUBJECT TO CHANGE BASED ON FINDINGS.

3. ALL ROOF SHEATHING TO BE 16 mm T&G PLYWOOD APPLIED DIRECTLY TO TRUSSES STRUCTURALLY ACCEPTABLE FOR PLYWOOD TO BE NON-T&G, BUT H-CLIPS MUST BE INCLUDED

4. PROVIDE FULL BEARING FOR ALL BEAMS SUPPORTED AT STUD WALL LOCATIONS. ALL POSTS ARE TO BE CONTINUOUS TO FOUNDATION BELOW, INCLUDING SOLID BLOCKING IN JOIST SPACE.

5. REFER TO **S202** FOR WOOD LINTEL SIZES.

NOT FOR CONSTRUCTION

LGA architectural partners
310 Spadina Ave, Suite 100B
Toronto, Ontario, Canada M5T 2E8
T: 416 203 7600 F: 416 203 3342
lga-ap.com

NOTE: This drawing is the property of the architect and may not be reproduced or used without the expressed consent of the architect. The contractor shall be responsible for checking and verifying all levels and dimensions and shall report all discrepancies to the architect and obtain clarification prior to commencing work. Not for construction unless stamped by the architect and issued for such purpose.

DO NOT SCALE DRAWINGS

engineeringlink
building envelope & structure
375 University Ave., Suite 901
Toronto, ON M5G 2J5
416-599-(LINK) 5465
www.engineeringlink.ca
Project No. 23-1345

Professional Seal

ISSUE DATE:

NO.	DATE	DESCRIPTION
11	JUN 19, 2026	ISSUED FOR STRUCTURAL ADDENDUM SA-01
10	MAY 29, 2026	ISSUED FOR TENDER
9	MAY 29, 2026	ISSUED FOR PERMIT
7	FEB 17, 2025	ISSUED FOR COORDINATION
6	JUL 14, 2023	ISSUED FOR TENDER
5	MAY 09, 2023	ISSUED FOR TENDER COORDINATION
4	APR 12, 2023	ISSUED FOR PERMIT
3	APR 06, 2023	ISSUED FOR PERMIT COORDINATION
2	MAR 31, 2023	ISSUED FOR PERMIT COORDINATION
1	FEB 10, 2023	ISSUED FOR CLASS B COSTING

PROJECT:

ONTARIO ABORIGINAL HOUSING SERVICES (OAHS)

321 JOHN STREET, COBOURG, ONTARIO

SHEET TITLE:

ROOF FRAMING PLAN

PROJECT NO: 19851
SCALE: 1 : 50
DRAWN BY: AQV
REVIEWED BY: ADV

SHEET NO:

S204

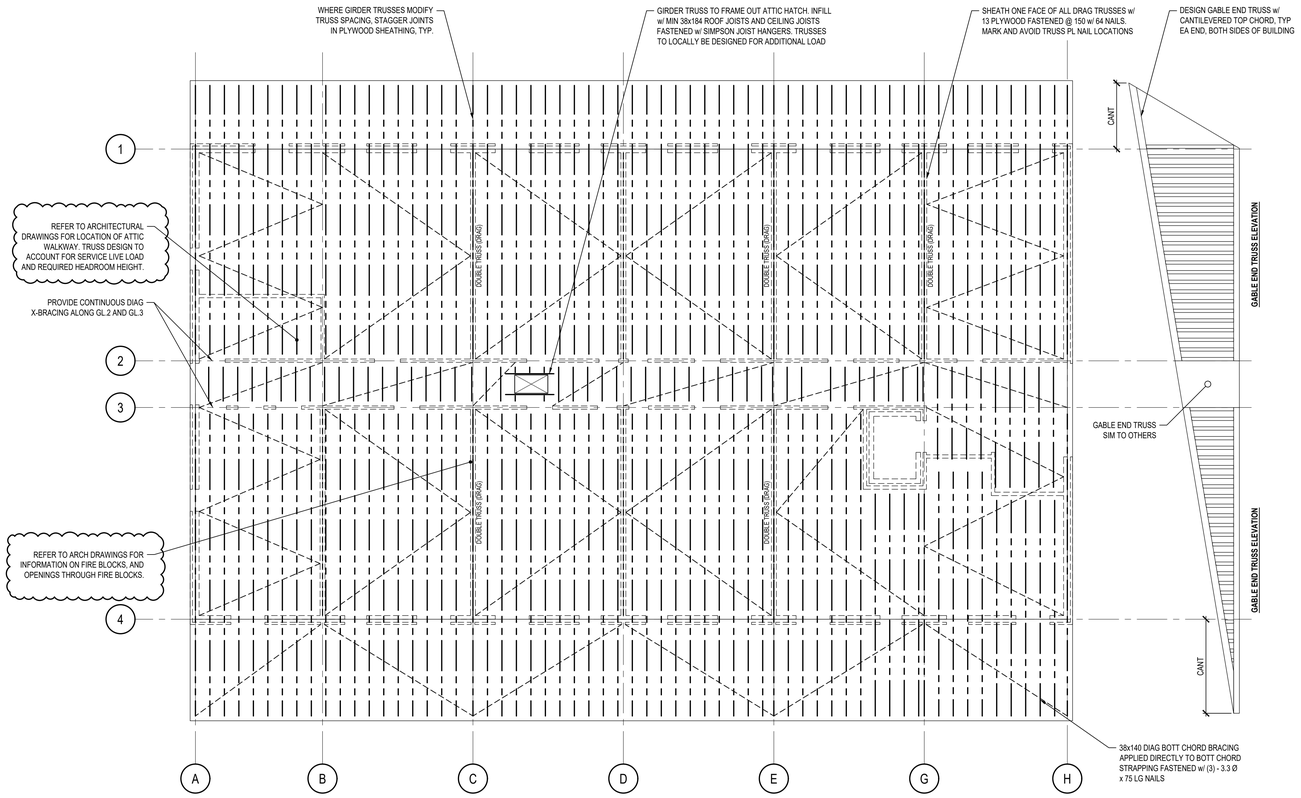

A / S205 GENERAL TRUSS LAYOUT AND BRACING PLAN
1 : 100

TRUSS BRACING NOTES

1. PROVIDE 38x89 @ 1200 c/c FASTENED TO EACH TRUSS WITH (2) - 3.3 Ø x 75 LONG NAILS.
2. PROVIDE FURRING CHANNELS FASTENED DIRECTLY TO U/S OF TOP CHORD TO ACCEPT (2) LAYERS OF 16 GYPSUM BOARD.

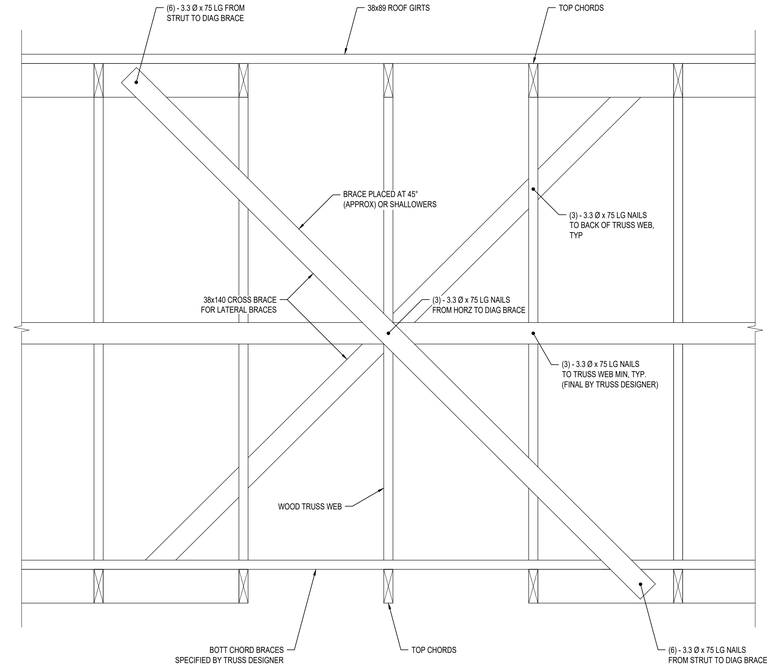

C / S205 SINGLE LATERAL GIRT - DIAGONAL BRACING
NTS

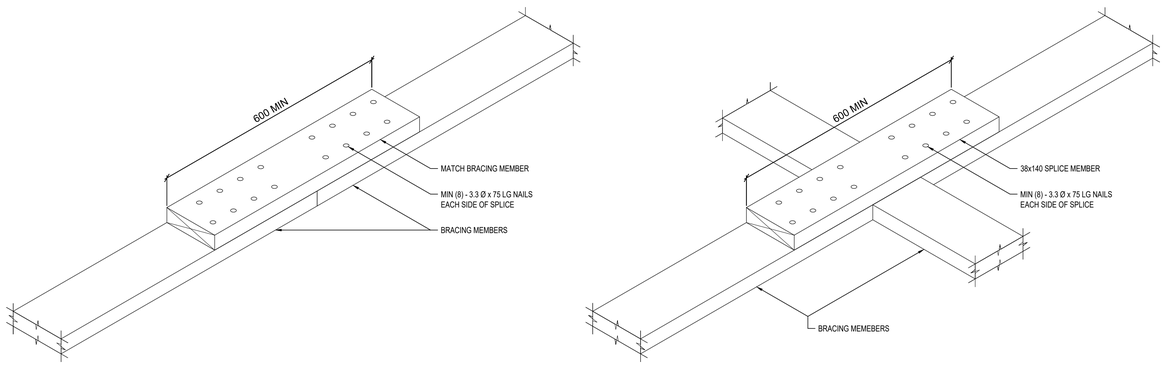

B / S205 BRACE SPLICE DETAILS
NTS

1. MID-TRUSS SPACING SPLICES ARE NOT PERMITTED. ALL SPLICES MUST OCCUR AT WEB/CHORD BRACING LOCATIONS.

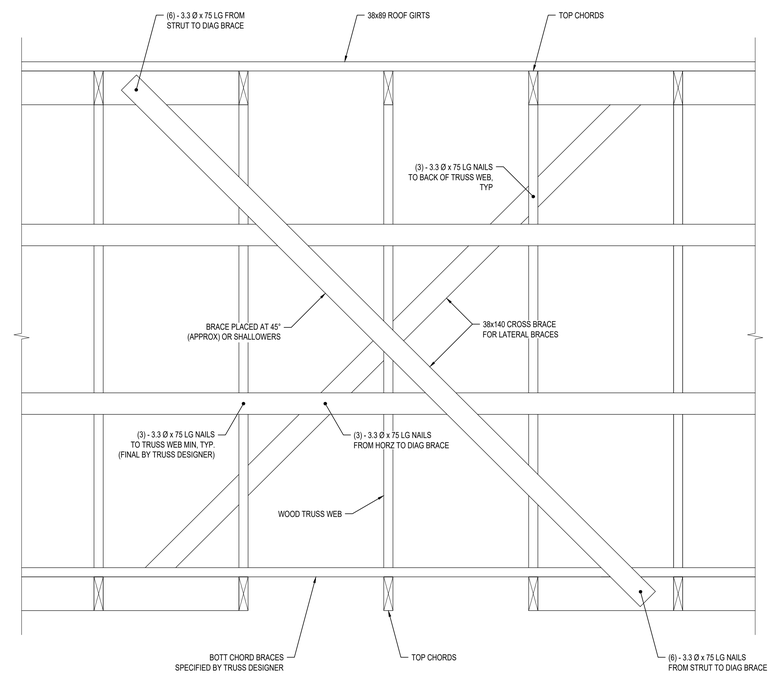

D / S205 DOUBLE LATERAL GIRT - DIAGONAL BRACING
NTS

LGA architectural partners
310 Spadina Ave, Suite 100B
Toronto, Ontario, Canada M5T 2E8
T: 416 203 7600 F: 416 203 3342
lga-ap.com

NOTE: This drawing is the property of the architect and may not be reproduced or used without the expressed consent of the architect. The contractor shall be responsible for checking and verifying all levels and dimensions and shall report all discrepancies to the architect and obtain clarification prior to commencing work. Not for construction unless stamped by the architect and issued for such purpose.

DO NOT SCALE DRAWINGS

engineeringlink
building envelope & structure
375 University Ave., Suite 901
Toronto, ON M5G 2J5
416-599-(LINK) 5465
www.engineeringlink.ca
Project No. 23-1345

Professional Seal

NOT FOR CONSTRUCTION

ISSUE DATE:

NO.	DATE	DESCRIPTION
11	JUN 19, 2026	ISSUED FOR STRUCTURAL ADDENDUM SA-01
10	MAY 29, 2026	ISSUED FOR TENDER
9	MAY 29, 2026	ISSUED FOR PERMIT
7	FEB 17, 2025	ISSUED FOR COORDINATION
6	JUL 14, 2023	ISSUED FOR TENDER
5	MAY 09, 2023	ISSUED FOR TENDER COORDINATION
4	APR 12, 2023	ISSUED FOR PERMIT
3	APR 06, 2023	ISSUED FOR PERMIT COORDINATION
2	MAR 31, 2023	ISSUED FOR PERMIT COORDINATION
1	FEB 10, 2023	ISSUED FOR CLASS B COSTING

PROJECT:

ONTARIO ABORIGINAL HOUSING SERVICES (OAHS)

321 JOHN STREET, COBOURG, ONTARIO

SHEET TITLE:

TRUSS BRACING PLAN

PROJECT NO: 19851
SCALE: 1 : 100
DRAWN BY: ADV
REVIEWED BY: ADV

SHEET NO:

S205

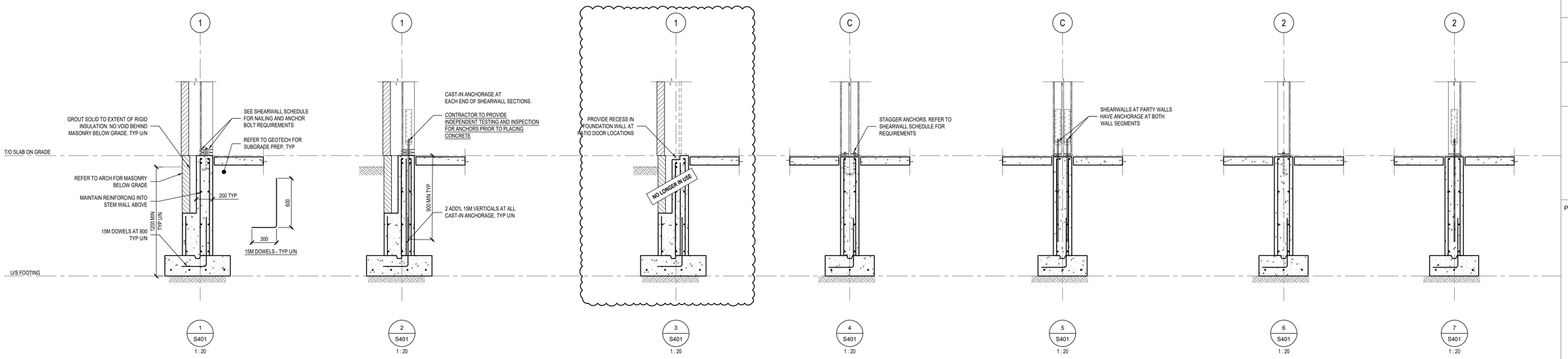

UNDERSIDE OF FOOTING ELEVATIONS ARE SHOWN ON PLAN SECTIONS TO NOT ACCURATELY REPRESENT CORRECT ELEVATIONS

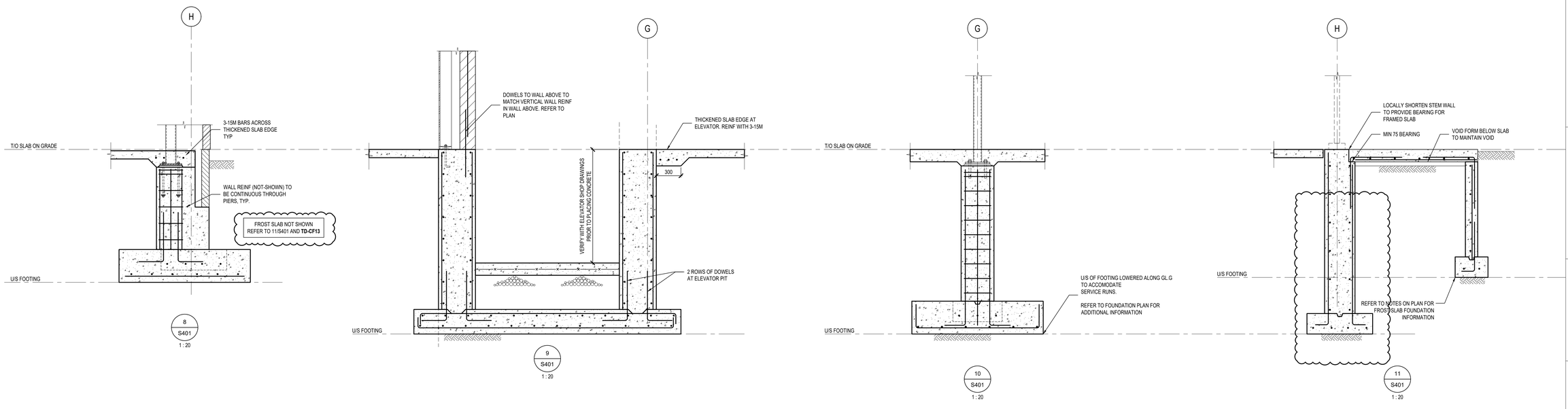

NOT FOR CONSTRUCTION

LGA architectural partners

310 Spadina Ave, Suite 100B
Toronto, Ontario, Canada M5T 2E8
T: 416 203 7600 F: 416 203 3342
lga-ap.com

NOTE: This drawing is the property of the architect and may not be reproduced or used without the expressed consent of the architect. The contractor shall be responsible for checking and verifying all levels and dimensions and shall report all discrepancies to the architect and obtain clarification prior to commencing work. Not for construction unless stamped by the architect and issued for such purpose.

DO NOT SCALE DRAWINGS

engineeringlink
building envelope & structure

375 University Ave., Suite 901
Toronto, ON M5G 2J5
416-599-(LINK) 5465
www.engineeringlink.ca

Project No. 23-1345

Professional Seal

ISSUE DATE:

NO.	DATE	DESCRIPTION
11	JUN 19, 2026	ISSUED FOR STRUCTURAL ADDENDUM SA-01
10	MAY 29, 2026	ISSUED FOR TENDER
9	MAY 29, 2026	ISSUED FOR PERMIT
7	FEB 17, 2025	ISSUED FOR COORDINATION
6	JUL 14, 2023	ISSUED FOR TENDER
5	MAY 09, 2023	ISSUED FOR TENDER COORDINATION
4	APR 12, 2023	ISSUED FOR PERMIT
3	APR 06, 2023	ISSUED FOR PERMIT COORDINATION
2	MAR 31, 2023	ISSUED FOR PERMIT COORDINATION
1	FEB 10, 2023	ISSUED FOR CLASS B COSTING

PROJECT:

ONTARIO ABORIGINAL HOUSING SERVICES (OAHS)

321 JOHN STREET, COBOURG, ONTARIO

SHEET TITLE:

SECTIONS AND DETAILS

PROJECT NO: 19851
SCALE: 1 : 20
DRAWN BY: ADV / STB
REVIEWED BY: ADV

SHEET NO:

S401

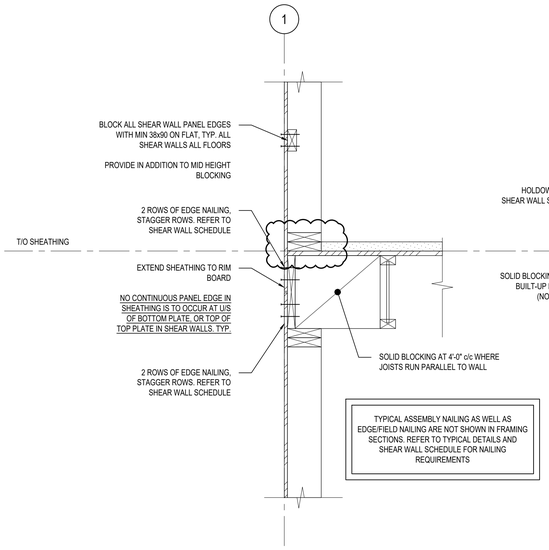

1 / S411 SHEAR WALL SECTION AT EXTERIOR WALL
1 : 10

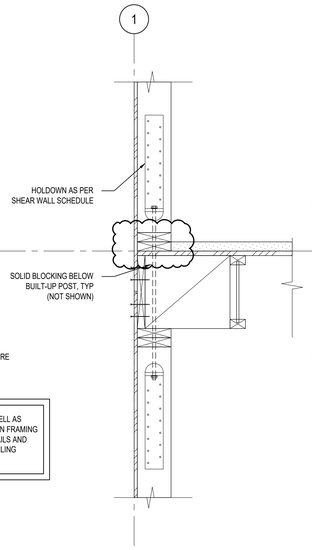

2 / S411 HOLDOWN AT EXTERIOR WALL
1 : 10

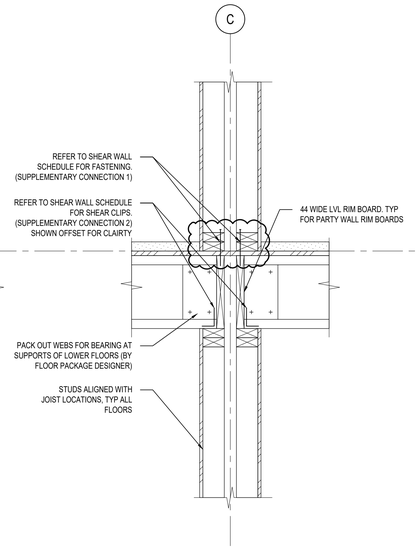

3 / S411 SHEAR WALL SECTION AT PARTY WALL
1 : 10

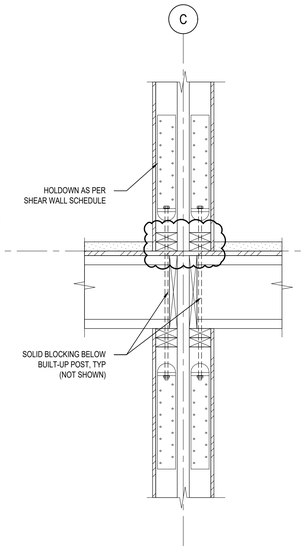

4 / S411 HOLDOWN AT PARTY WALL
1 : 10

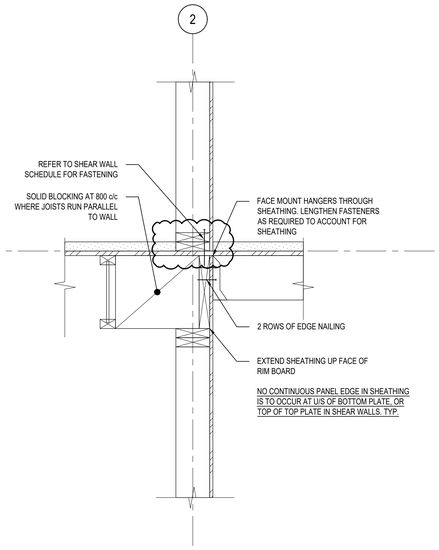

5 / S411 SHEAR WALL SECTION AT HALLWAY WALL
1 : 10

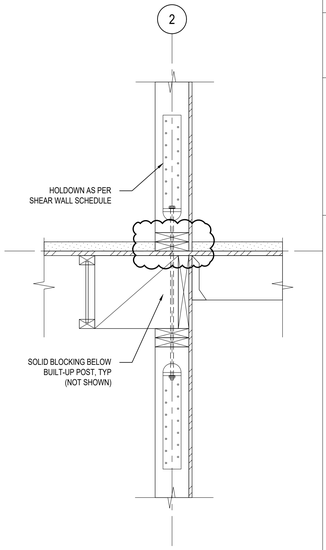

6 / S411 HOLDOWN AT HALLWAY WALL
1 : 10

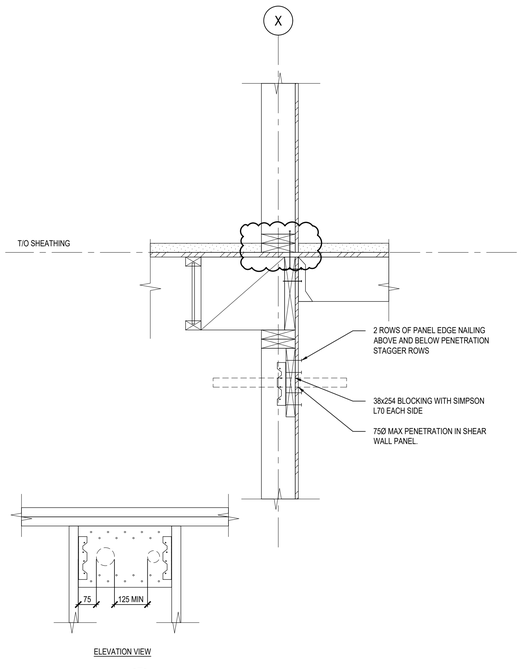

5 / S411 SHEAR WALL SECTION AT COORIDOR - MECH PENETRATIONS
1 : 10

TYPICAL FOR SECOND AND 3RD FLOOR PLATES

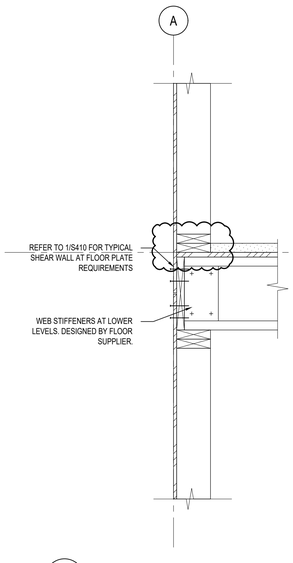

6 / S411 SHEAR WALL SECTION AT GABLE WALL
1 : 10

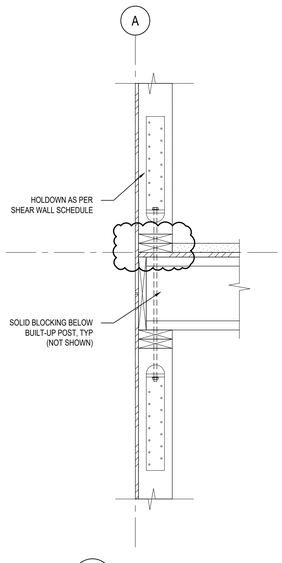

7 / S411 HOLDDOWN AT GABLE WALL
1 : 10

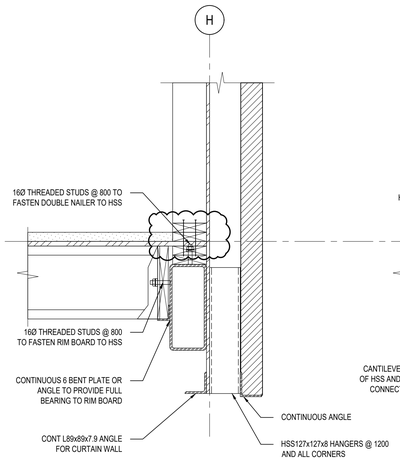

8 / S411
1 : 10

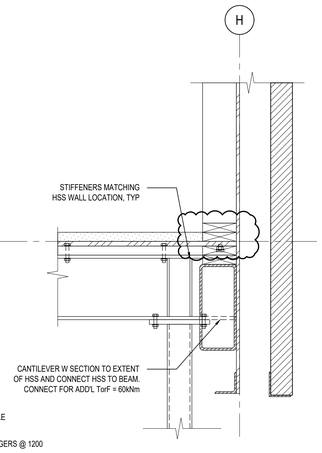

9 / S411
1 : 10

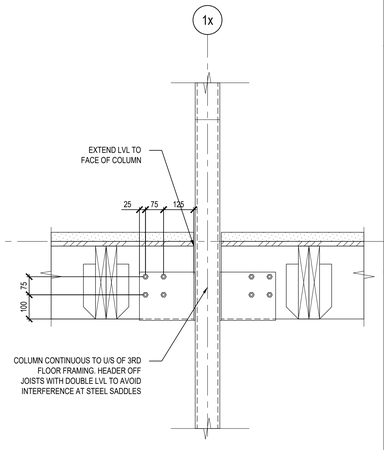

10 / S411
1 : 10

LGA architectural partners
310 Spadina Ave, Suite 100B
Toronto, Ontario, Canada M5T 2E8
T: 416 203 7600 F: 416 203 3342
lga-ap.com

NOTE: This drawing is the property of the architect and may not be reproduced or used without the expressed consent of the architect. The contractor shall be responsible for checking and verifying all levels and dimensions and shall report all discrepancies to the architect and obtain clarification prior to commencing work. Not for construction unless stamped by the architect and issued for such purpose.

DO NOT SCALE DRAWINGS

engineeringlink
building envelope & structure
375 University Ave., Suite 901
Toronto, ON M5G 2J5
416-599-(LINK) 5465
www.engineeringlink.ca
Project No. 23-1345

Professional Seal

NOT FOR CONSTRUCTION

ISSUE DATE:

NO.	DATE	DESCRIPTION
11	JUN 19, 2026	ISSUED FOR STRUCTURAL ADDENDUM SA-01
10	MAY 29, 2026	ISSUED FOR TENDER
9	MAY 29, 2026	ISSUED FOR PERMIT
7	FEB 17, 2025	ISSUED FOR COORDINATION
6	JUL 14, 2023	ISSUED FOR TENDER
5	MAY 09, 2023	ISSUED FOR TENDER COORDINATION
4	APR 12, 2023	ISSUED FOR PERMIT
3	APR 06, 2023	ISSUED FOR PERMIT COORDINATION
2	MAR 31, 2023	ISSUED FOR PERMIT COORDINATION
1	FEB 10, 2023	ISSUED FOR CLASS B COSTING

PROJECT:

ONTARIO ABORIGINAL HOUSING SERVICES (OAHS)

321 JOHN STREET, COBOURG, ONTARIO

SHEET TITLE:

SECTIONS AND DETAILS

PROJECT NO: 19851
SCALE: 1 : 10
DRAWN BY: ADV / STB
REVIEWED BY: ADV

SHEET NO:

S411

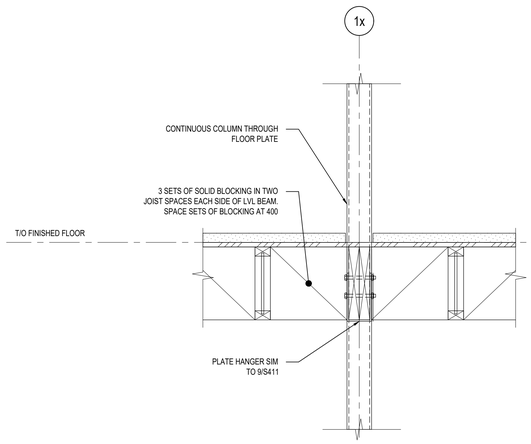

1 / S412
1 : 10

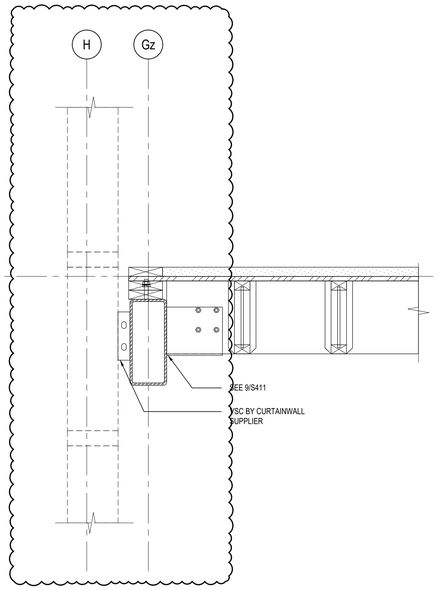

2 / S412
1 : 10

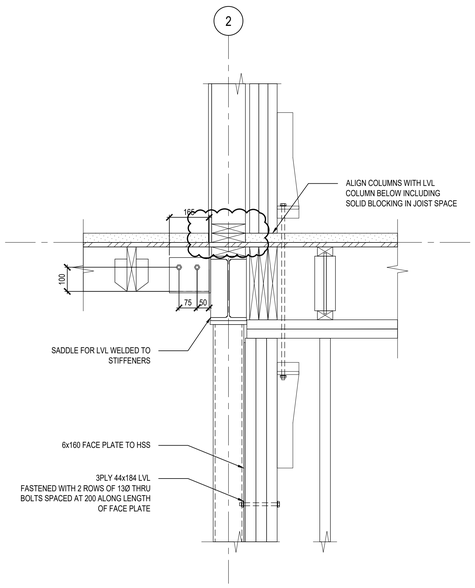

3 / S412
1 : 10

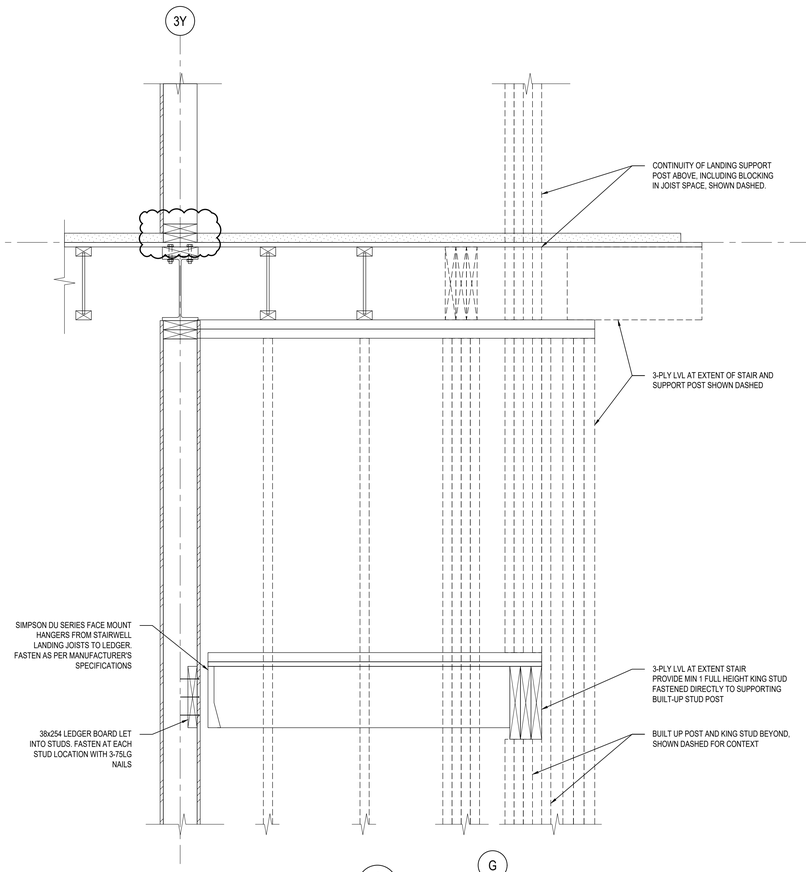

4 / S412
1 : 10

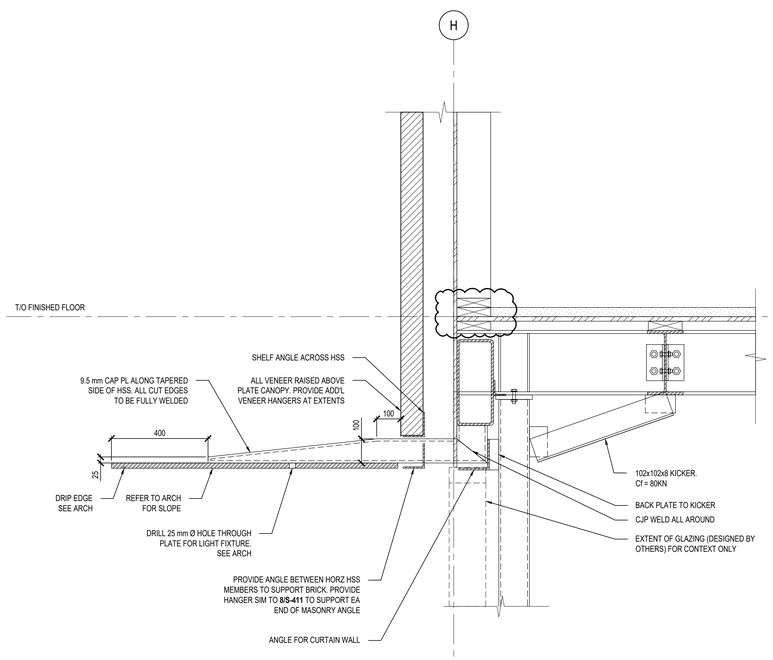

5 / S412
1 : 10

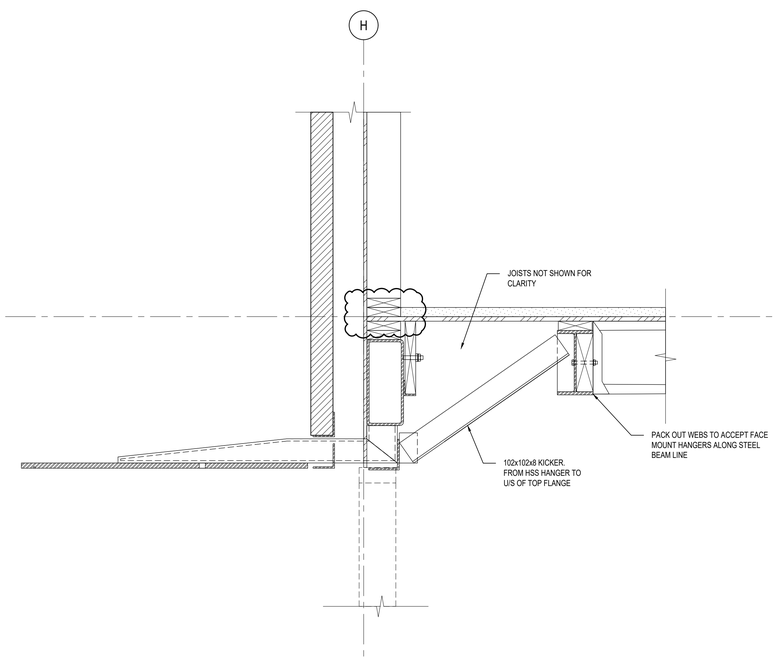

6 / S412
1 : 10

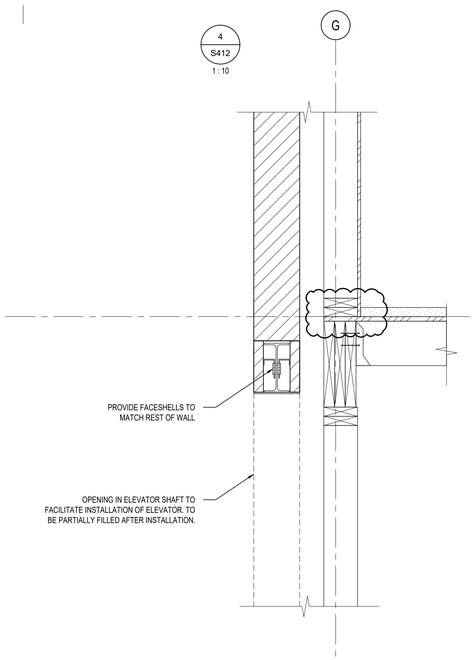

7 / S412
1 : 10

LGA architectural partners

310 Spadina Ave, Suite 100B
Toronto, Ontario, Canada M5T 2E8
T: 416 203 7600 F: 416 203 3342
lga-ap.com

NOTE: This drawing is the property of the architect and may not be reproduced or used without the expressed consent of the architect. The contractor shall be responsible for checking and verifying all levels and dimensions and shall report all discrepancies to the architect and obtain clarification prior to commencing work. Not for construction unless stamped by the architect and issued for such purpose.

DO NOT SCALE DRAWINGS

engineeringlink
building envelope & structure

375 University Ave., Suite 901
Toronto, ON M5G 2J5
416-599-(LINK) 5465
www.engineeringlink.ca

Project No. 23-1345

Professional Seal

NOT FOR CONSTRUCTION

ISSUE DATE:

NO.	DATE	DESCRIPTION
11	JUN 19, 2026	ISSUED FOR STRUCTURAL ADDENDUM SA-01
10	MAY 29, 2026	ISSUED FOR TENDER
9	MAY 29, 2026	ISSUED FOR PERMIT
7	FEB 17, 2025	ISSUED FOR COORDINATION
2	JUL 14, 2023	ISSUED FOR TENDER
1	APR 12, 2023	ISSUED FOR PERMIT

PROJECT:

ONTARIO ABORIGINAL HOUSING SERVICES (OAHS)

321 JOHN STREET, COBOURG, ONTARIO

SHEET TITLE:

SECTIONS AND DETAILS

PROJECT NO: 19851
SCALE: 1 : 10
DRAWN BY: ADV / STB
REVIEWED BY: ADV

SHEET NO:

S412

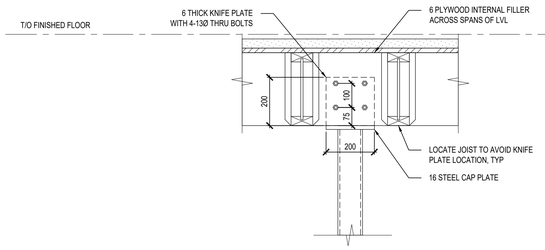

1
S413
1 : 10

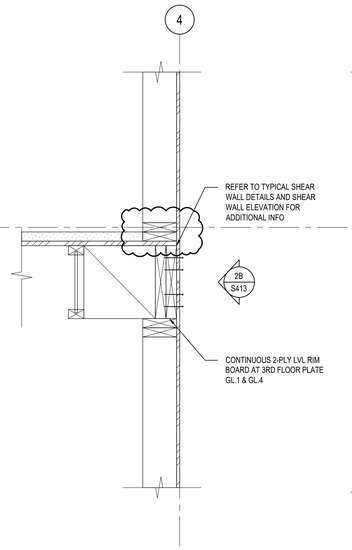

2A
S413
1 : 10

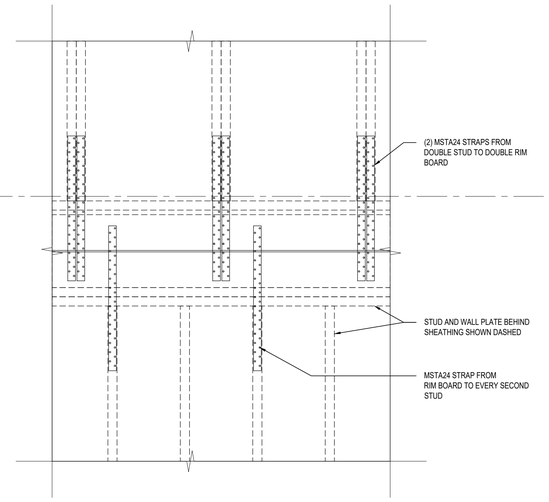

2B
S413
1 : 10

LGA architectural partners

310 Spadina Ave, Suite 100B
Toronto, Ontario, Canada M5T 2E8
T: 416 203 7600 F: 416 203 3342
lga-ap.com

NOTE: This drawing is the property of the architect and may not be reproduced or used without the expressed consent of the architect. The contractor shall be responsible for checking and verifying all levels and dimensions and shall report all discrepancies to the architect and obtain clarification prior to commencing work. Not for construction unless stamped by the architect and issued for such purpose.

DO NOT SCALE DRAWINGS

engineeringlink
building envelope & structure

375 University Ave., Suite 901
Toronto, ON M5G 2J5
416-599-(LINK) 5465
www.engineeringlink.ca

Project No. 23-1345

Professional Seal

NOT FOR CONSTRUCTION

ISSUE DATE:

NO.	DATE	DESCRIPTION
11	JUN 19, 2026	ISSUED FOR STRUCTURAL ADDENDUM SA-01
10	MAY 29, 2026	ISSUED FOR TENDER
9	MAY 29, 2026	ISSUED FOR PERMIT
7	FEB 17, 2025	ISSUED FOR COORDINATION
2	JUL 14, 2023	ISSUED FOR TENDER
1	APR 12, 2023	ISSUED FOR PERMIT

PROJECT:

ONTARIO ABORIGINAL HOUSING SERVICES (OAHS)

321 JOHN STREET, COBOURG, ONTARIO

SHEET TITLE:

SECTIONS
AND DETAILS

PROJECT NO: 19851
SCALE: 1 : 10
DRAWN BY: ADV / STB
REVIEWED BY: ADV

SHEET NO:

S413

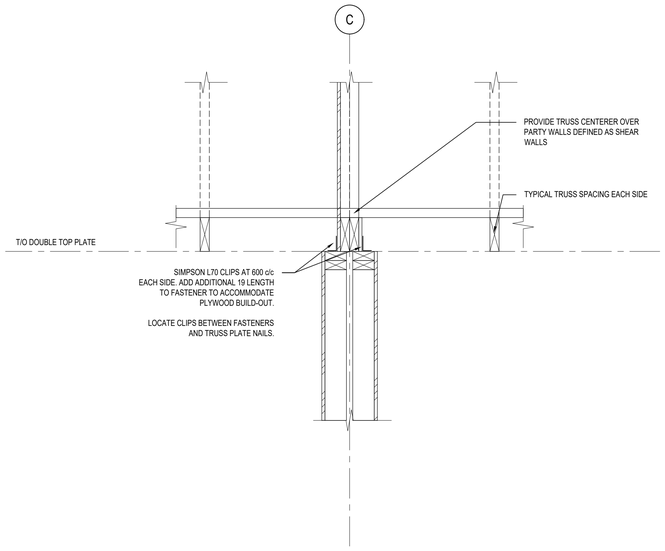

1
S414
1 : 10

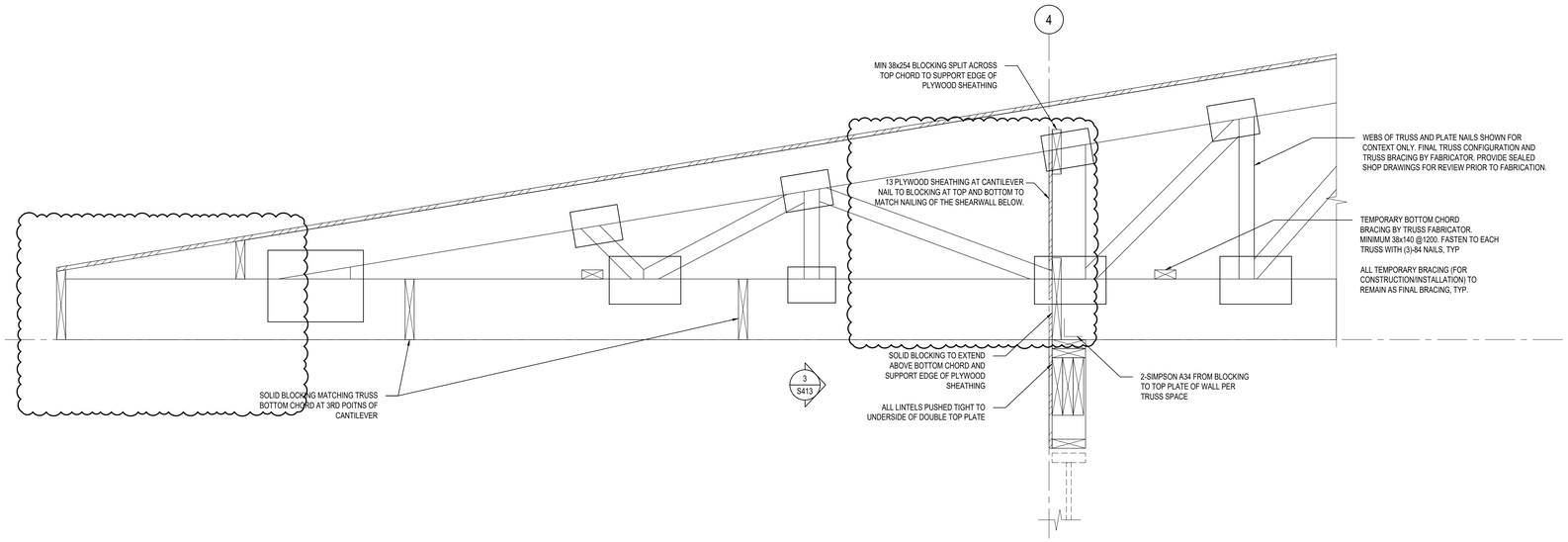

2
S414
1 : 10

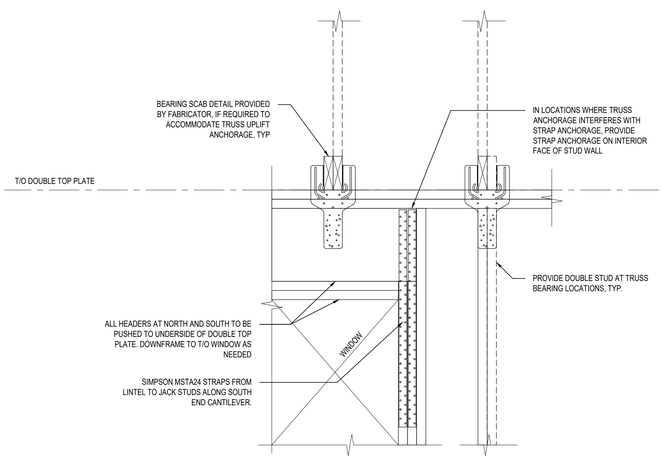

3
S414
1 : 10

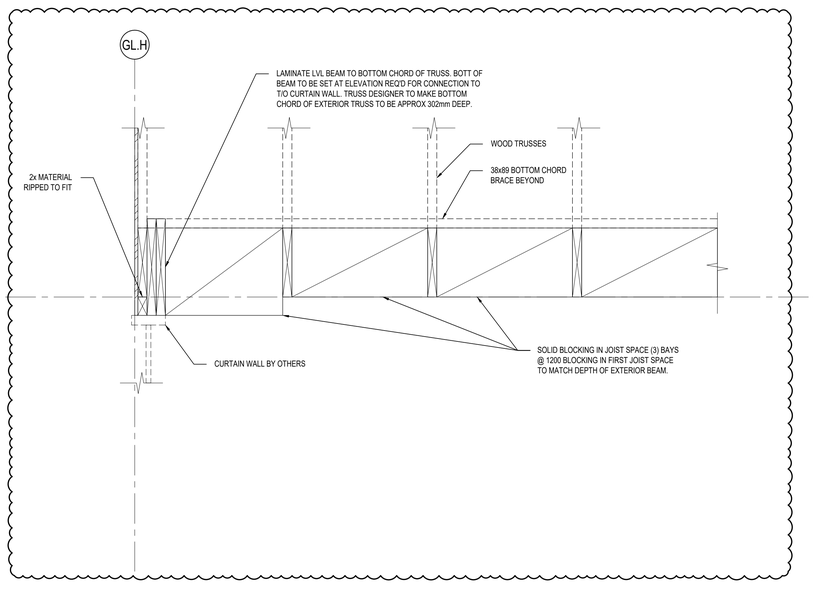

4
S414
1 : 10

LGA architectural partners

310 Spadina Ave, Suite 100B
Toronto, Ontario, Canada M5T 2E8
T: 416 203 7600 F: 416 203 3342
lga-ap.com

NOTE: This drawing is the property of the architect and may not be reproduced or used without the expressed consent of the architect. The contractor shall be responsible for checking and verifying all levels and dimensions and shall report all discrepancies to the architect and obtain clarification prior to commencing work. Not for construction unless stamped by the architect and issued for such purpose.

DO NOT SCALE DRAWINGS

engineeringlink
building envelope & structure

375 University Ave., Suite 901
Toronto, ON M5G 2J5
416-599-(LINK) 5465
www.engineeringlink.ca

Project No. 23-1345

Professional Seal

NOT FOR CONSTRUCTION

ISSUE DATE:

NO.	DATE	DESCRIPTION
11	JUN 19, 2026	ISSUED FOR STRUCTURAL ADDENDUM SA-01
10	MAY 29, 2026	ISSUED FOR TENDER
9	MAY 29, 2026	ISSUED FOR PERMIT
7	FEB 17, 2025	ISSUED FOR COORDINATION
2	JUL 14, 2023	ISSUED FOR TENDER
1	APR 12, 2023	ISSUED FOR PERMIT

PROJECT:

ONTARIO ABORIGINAL HOUSING SERVICES (OAHS)

321 JOHN STREET, COBOURG, ONTARIO

SHEET TITLE:

SECTIONS AND DETAILS

PROJECT NO: 19851
SCALE: 1 : 10
DRAWN BY: ADV / STB
REVIEWED BY: ADV

SHEET NO:

S414

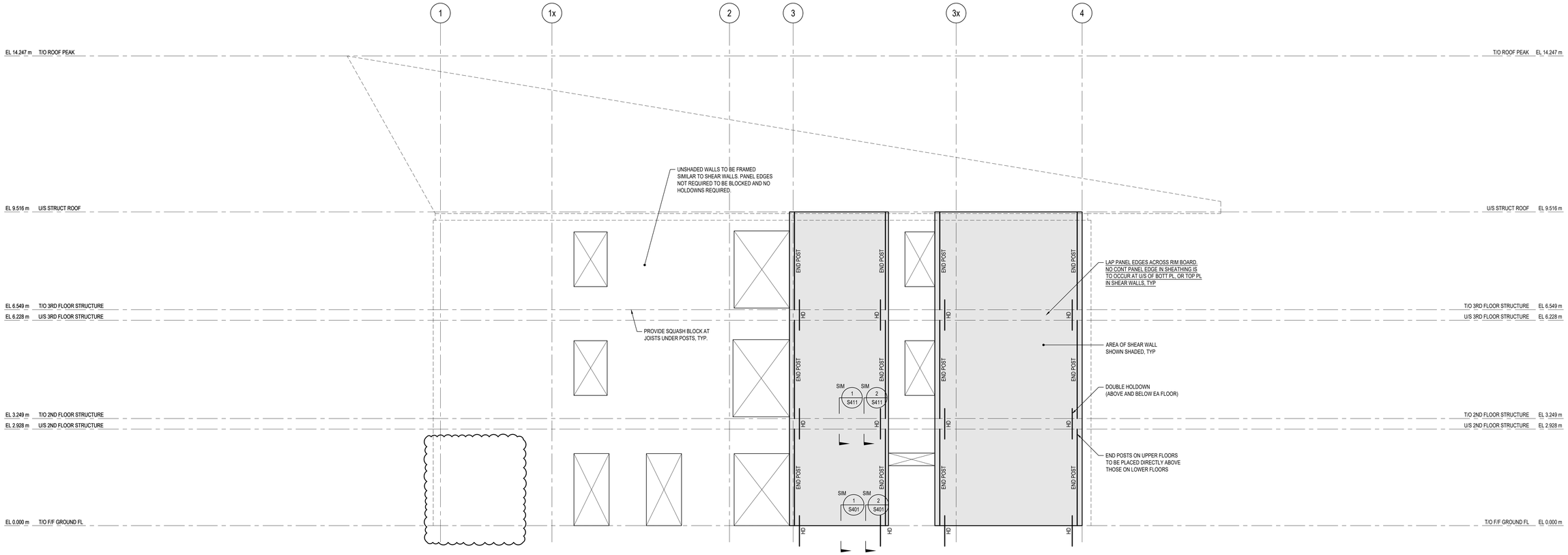

A S501 SHEAR WALL ELEVATION - EXTERIOR WEST - GRID A

1 : 50

1. ELEVATIONS PROVIDED FOR CONTEXT.
2. REFER TO SHEAR WALL SCHEDULE ON **S202** FOR ADDITIONAL REQUIREMENTS.

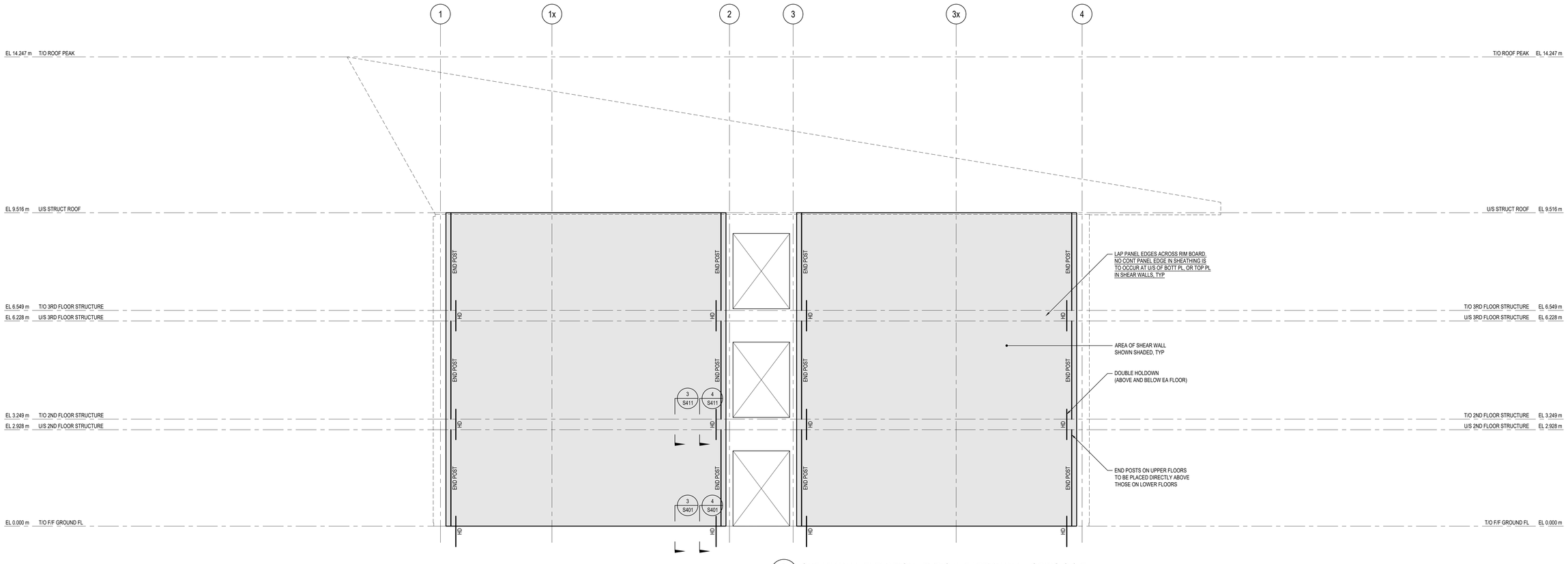

B S501 SHEAR WALL ELEVATION - TYPICAL PARTY WALL - GRIDS C & E

1 : 50

1. REFER TO **A/S501** FOR ELEVATION NOTES.

LGA architectural partners

310 Spadina Ave, Suite 100B
Toronto, Ontario, Canada M5T 2E8
T: 416 203 7600 F: 416 203 3342
lga-ap.com

NOTE: This drawing is the property of the architect and may not be reproduced or used without the expressed consent of the architect. The contractor shall be responsible for checking and verifying all levels and dimensions and shall report all discrepancies to the architect and obtain clarification prior to commencing work. Not for construction unless stamped by the architect and issued for such purpose.

DO NOT SCALE DRAWINGS

engineeringlink
building envelope & structure

375 University Ave., Suite 901
Toronto, ON M5G 2J5
416-599-(LINK) 5465
www.engineeringlink.ca

Project No. 23-1345

Professional Seal

NOT FOR CONSTRUCTION

ISSUE DATE:

NO.	DATE	DESCRIPTION
11	JUN 19, 2026	ISSUED FOR STRUCTURAL ADDENDUM SA-01
10	MAY 29, 2026	ISSUED FOR TENDER
9	MAY 29, 2026	ISSUED FOR PERMIT
7	FEB 17, 2026	ISSUED FOR COORDINATION
6	JUL 14, 2023	ISSUED FOR TENDER
5	MAY 09, 2023	ISSUED FOR TENDER COORDINATION
4	APR 12, 2023	ISSUED FOR PERMIT
3	APR 06, 2023	ISSUED FOR PERMIT COORDINATION
2	MAR 31, 2023	ISSUED FOR PERMIT COORDINATION
1	FEB 10, 2023	ISSUED FOR CLASS B COSTING

PROJECT:

ONTARIO ABORIGINAL HOUSING SERVICES (OAHS)

321 JOHN STREET, COBOURG, ONTARIO

SHEET TITLE:

SHEAR WALL ELEVATIONS

PROJECT NO: 19851
SCALE: 1 : 50
DRAWN BY: AQV
REVIEWED BY: ADV

SHEET NO:

S501

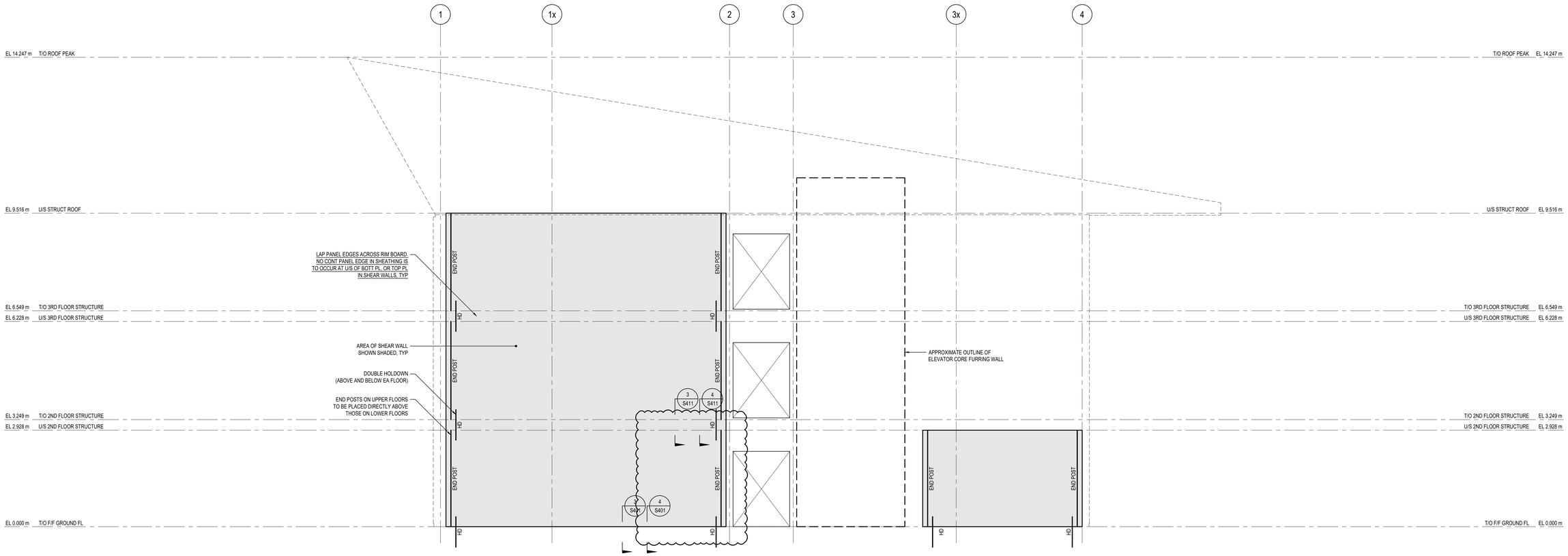

A S502 SHEAR WALL ELEVATION - PARTY WALL - GRID G

1 : 50

1. REFER TO **A/S501** FOR ELEVATION NOTES.

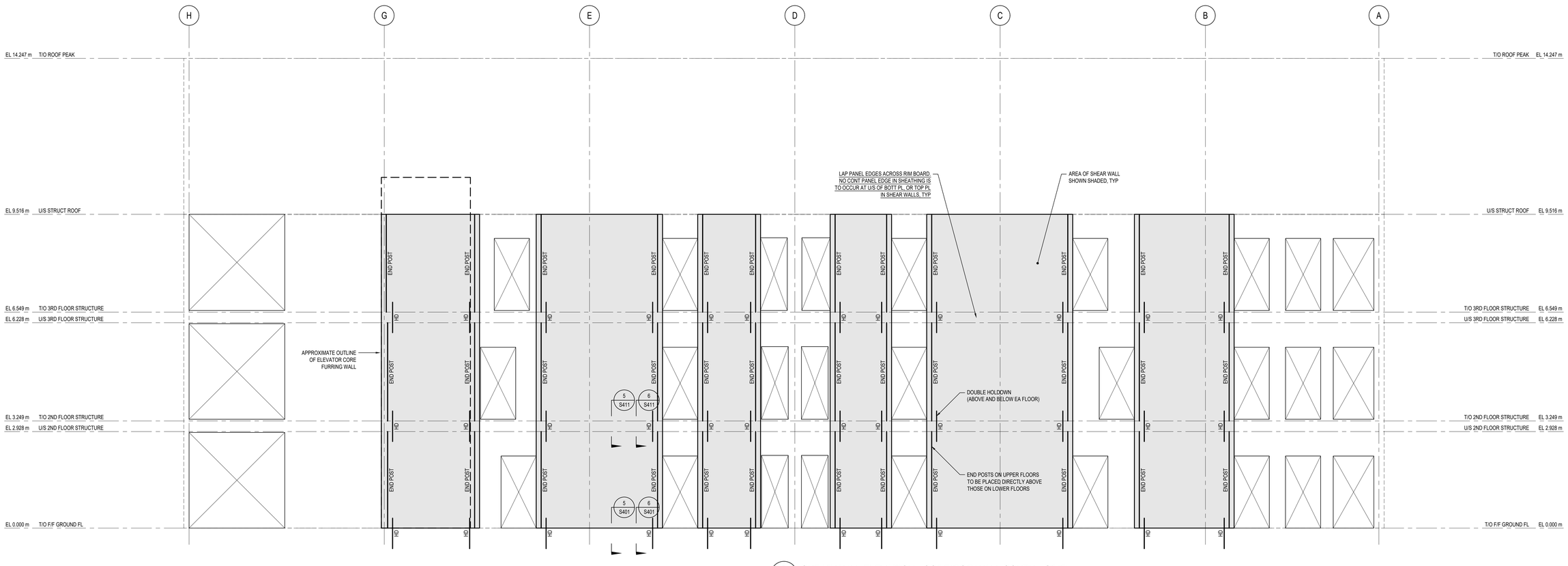

B S502 SHEAR WALL ELEVATION - CORRIDOR WALL SOUTH - GRID 3

1 : 50

1. REFER TO **A/S501** FOR ELEVATION NOTES.

LGA architectural partners

310 Spadina Ave, Suite 100B
Toronto, Ontario, Canada M5T 2E8
T: 416 203 7600 F: 416 203 3342
lga-ap.com

NOTE: This drawing is the property of the architect and may not be reproduced or used without the expressed consent of the architect. The contractor shall be responsible for checking and verifying all levels and dimensions and shall report all discrepancies to the architect and obtain clarification prior to commencing work. Not for construction unless stamped by the architect and issued for such purpose.

DO NOT SCALE DRAWINGS

engineeringlink
building envelope & structure

375 University Ave., Suite 901
Toronto, ON M5G 2J5
416-599-(LINK) 5465
www.engineeringlink.ca

Project No. 23-1345

Professional Seal

NOT FOR CONSTRUCTION

ISSUE DATE:

NO.	DATE	DESCRIPTION
11	JUN 19, 2026	ISSUED FOR STRUCTURAL ADDENDUM SA-01
10	MAY 29, 2026	ISSUED FOR TENDER
9	MAY 29, 2026	ISSUED FOR PERMIT
7	FEB 17, 2026	ISSUED FOR COORDINATION
6	JUL 14, 2023	ISSUED FOR TENDER
5	MAY 09, 2023	ISSUED FOR TENDER COORDINATION
4	APR 12, 2023	ISSUED FOR PERMIT
3	APR 06, 2023	ISSUED FOR PERMIT COORDINATION
2	MAR 31, 2023	ISSUED FOR PERMIT COORDINATION
1	FEB 10, 2023	ISSUED FOR CLASS B COSTING

PROJECT:

ONTARIO ABORIGINAL HOUSING SERVICES (OAHS)

321 JOHN STREET, COBOURG, ONTARIO

SHEET TITLE:

SHEAR WALL ELEVATIONS

PROJECT NO: 19851
SCALE: 1 : 50
DRAWN BY: AQV
REVIEWED BY: ADV

SHEET NO:

S502

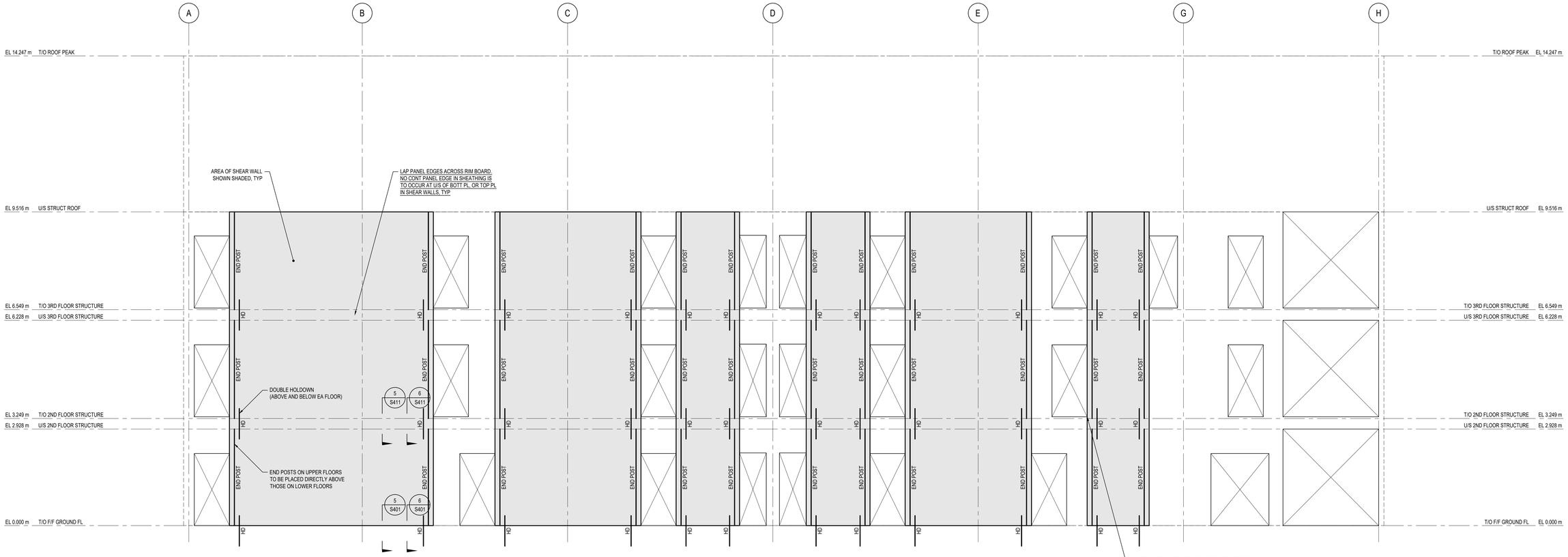

A / S503 SHEAR WALL ELEVATION - CORRIDOR WALL NORTH - GRID 2

1 : 50

1. REFER TO **A/S501** FOR ELEVATION NOTES.

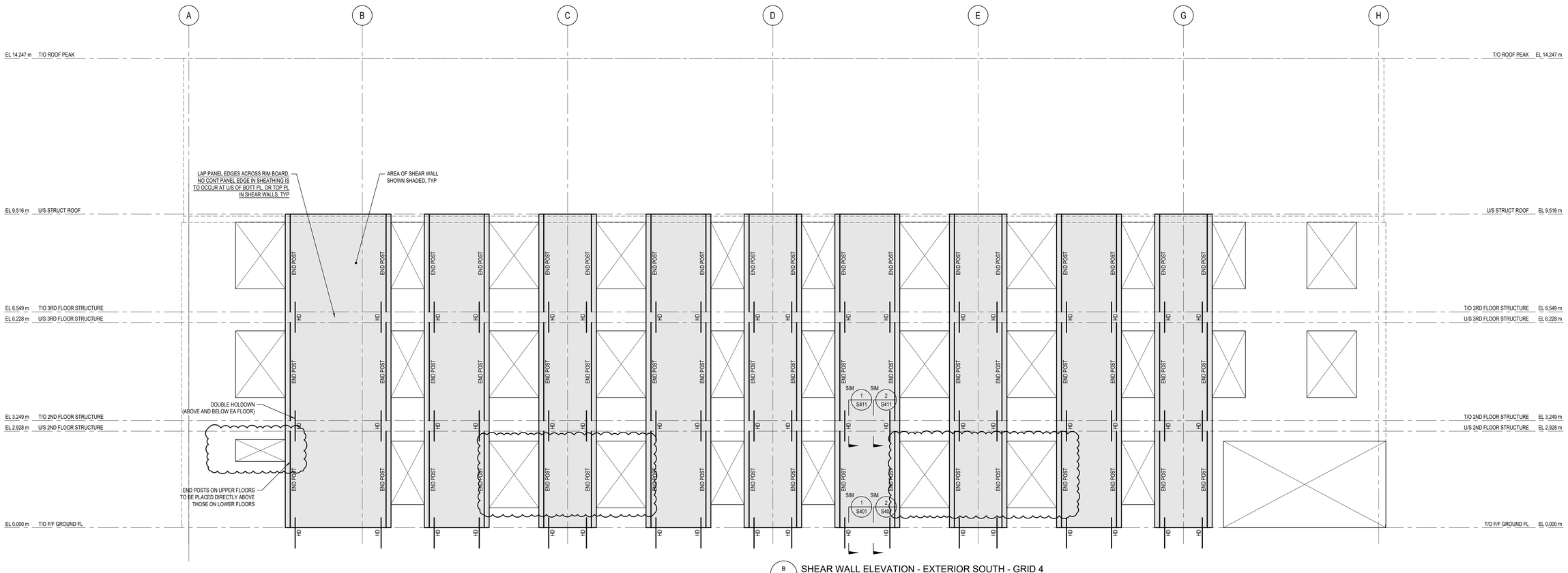

B / S503 SHEAR WALL ELEVATION - EXTERIOR SOUTH - GRID 4

1 : 50

1. REFER TO **A/S501** FOR ELEVATION NOTES.

LGA architectural partners

310 Spadina Ave, Suite 100B
Toronto, Ontario, Canada M5T 2E8
T: 416 203 7600 F: 416 203 3342
lga-ap.com

NOTE: This drawing is the property of the architect and may not be reproduced or used without the expressed consent of the architect. The contractor shall be responsible for checking and verifying all levels and dimensions and shall report all discrepancies to the architect and obtain clarification prior to commencing work. Not for construction unless stamped by the architect and issued for such purpose.

DO NOT SCALE DRAWINGS

engineeringlink
building envelope & structure

375 University Ave., Suite 901
Toronto, ON M5G 2J5
416-599-(LINK) 5465
www.engineeringlink.ca

Project No. 23-1345

Professional Seal

NOT FOR CONSTRUCTION

ISSUE DATE:

NO.	DATE	DESCRIPTION
11	JUN 19, 2026	ISSUED FOR STRUCTURAL ADDENDUM SA-01
10	MAY 29, 2026	ISSUED FOR TENDER
9	MAY 29, 2026	ISSUED FOR PERMIT
7	FEB 17, 2026	ISSUED FOR COORDINATION
6	JUL 14, 2023	ISSUED FOR TENDER
5	MAY 09, 2023	ISSUED FOR TENDER COORDINATION
4	APR 12, 2023	ISSUED FOR PERMIT
3	APR 06, 2023	ISSUED FOR PERMIT COORDINATION
2	MAR 31, 2023	ISSUED FOR PERMIT COORDINATION
1	FEB 10, 2023	ISSUED FOR CLASS B COSTING

PROJECT:

ONTARIO ABORIGINAL HOUSING SERVICES (OAHS)

321 JOHN STREET, COBOURG, ONTARIO

SHEET TITLE:

SHEAR WALL ELEVATIONS

PROJECT NO: 19851
SCALE: 1 : 50
DRAWN BY: AQV
REVIEWED BY: ADV

SHEET NO:

S503

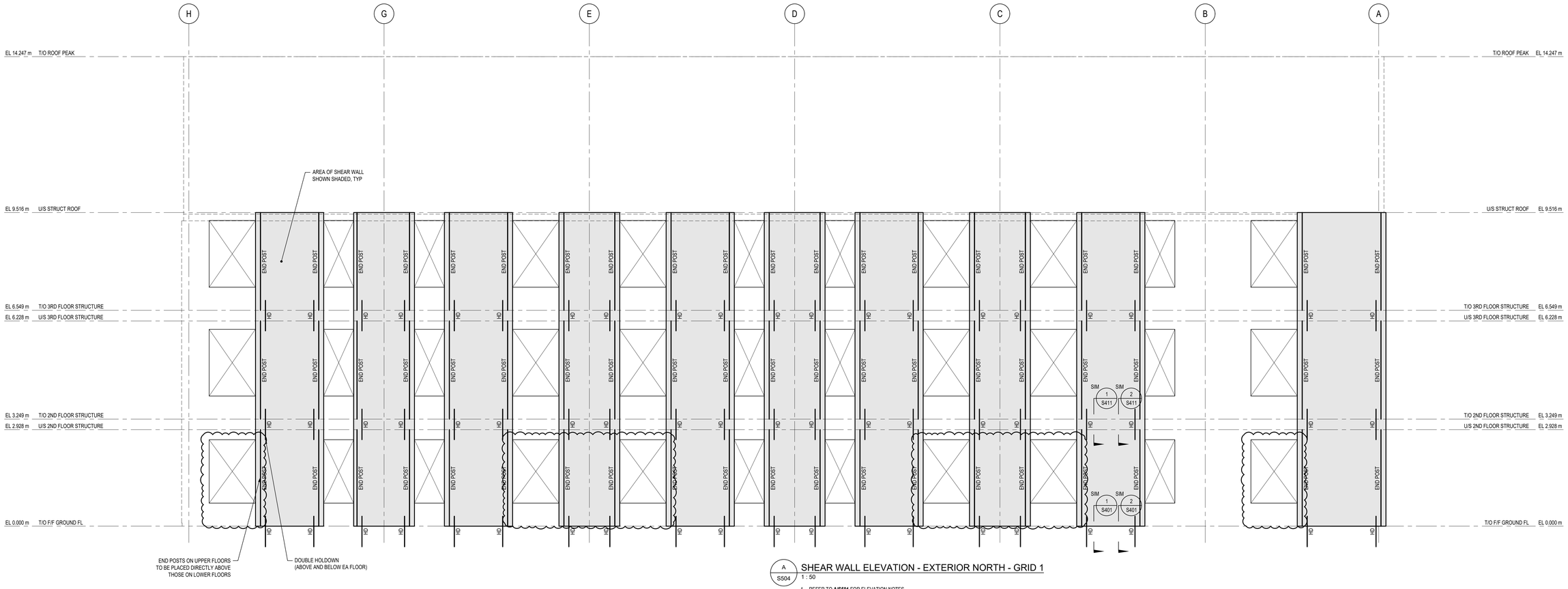

A / S504 SHEAR WALL ELEVATION - EXTERIOR NORTH - GRID 1

1 : 50

1. REFER TO **A/S501** FOR ELEVATION NOTES.

NOT FOR CONSTRUCTION

LGA architectural partners

310 Spadina Ave, Suite 100B
Toronto, Ontario, Canada M5T 2E8
T: 416 203 7600 F: 416 203 3342
lga-ap.com

NOTE: This drawing is the property of the architect and may not be reproduced or used without the expressed consent of the architect. The contractor shall be responsible for checking and verifying all levels and dimensions and shall report all discrepancies to the architect and obtain clarification prior to commencing work. Not for construction unless stamped by the architect and issued for such purpose.

DO NOT SCALE DRAWINGS

engineeringlink
building envelope & structure

375 University Ave., Suite 901
Toronto, ON M5G 2J5
416-599-(LINK) 5465
www.engineeringlink.ca

Project No. 23-1345

Professional Seal

ISSUE DATE:

NO.	DATE	DESCRIPTION
11	JUN 19, 2026	ISSUED FOR STRUCTURAL ADDENDUM SA-01
10	MAY 29, 2026	ISSUED FOR TENDER
9	MAY 29, 2026	ISSUED FOR PERMIT
7	FEB 17, 2025	ISSUED FOR COORDINATION
6	JUL 14, 2023	ISSUED FOR TENDER
5	MAY 09, 2023	ISSUED FOR TENDER COORDINATION
4	APR 12, 2023	ISSUED FOR PERMIT
3	APR 06, 2023	ISSUED FOR PERMIT COORDINATION
2	MAR 31, 2023	ISSUED FOR PERMIT COORDINATION
1	FEB 10, 2023	ISSUED FOR CLASS B COSTING

PROJECT:

ONTARIO ABORIGINAL HOUSING SERVICES (OAHS)

321 JOHN STREET, COBOURG, ONTARIO

SHEET TITLE:

SHEAR WALL ELEVATIONS

PROJECT NO: 19851
SCALE: 1 : 50
DRAWN BY: AQV
REVIEWED BY: ADV

SHEET NO:

S504